YAMAHA

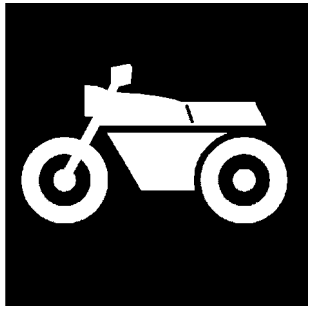

PARTS CATALOGUE
CATALOGO DE REPUESTOS

T115FL-5 (BF24) COLOMBIA

YAMAHA GENUINE Parts & Accessories

1UBF2-261S1

( )

T115FL-5
CATALOGO DE REPUESTOS
©2018 por Yamaha Motor Co., Ltd.
1ª edición, julio 2018
Todos los derechos reservados.
Toda reproducción o uso no autorizado
sin el consentimiento escrito de
Yamaha Motor Co., Ltd.
quedan expresamente prohibidos
Impreso en Japón.

T115FL-5
PARTS CATALOGUE
©2018 by Yamaha Motor Co., Ltd.
1st edition, July 2018
All rights reserved.
Any reprinting or unauthorized use
without the written permission of
Yamaha Motor Co., Ltd.
is expressly prohibited.
Printed in Japan.

PROLOGO

Este catálogo de repuestos corresponde a las piezas para el o los modelos que figuran en la página de portada. Al formular el pedido de repuestos, se ruega citar este catálogo y especificar correctamente el número y el nombre de las piezas.

1. Las modificaciones y agregados que se hayan realizado después de la edición de este Catálogo de Repuestos, serán anunciados en las Informaciones de Recambios.
   Es recomendable que se hagan las correcciones necesarias en el Catálogo de Repuestos de acuerdo con las Informaciones de Recambios.

2. Abreviaciones
   En este. Catálogo de Repuestos se emplean las siguientes abreviaciones.

   “UR” Usar el número de partes especificado

   “UN” Usar la cantidad necesaria

   “AP” Piezas sustitutivas

   “LM” Fabricación local (Hay que pedir los repuestos en las cercanías)

   “F#” Nº de bastidor (Nº aplicable a la máquina)

   “O/S” Sobredimensionado

3. La cantidad de componentes para el montaje
   - Los componentes, suministrados como conjunto, se describen con un punto (.) que precede al nombre del parte como se indica a continuación.
   - La numeración que aparece a la derecha de cada descripción indica la cantidad de partes por cada unidad de conjunto.

CODIGO Nº	DESCRIPCION	CANT.	OBSERVACIONES
2F5–83310–60	ENSAMBLAJE DE LA LUZ	2	
115–83311–60	.BOMBILLA (6V–18W)	1	

4. Los colores de los componentes se indican como sigue en la columna de “OBSERVACIONES”.

CODIGO Nº	DESCRIPCION	CANT.	OBSERVACIONES
2N4–24110–00–X5	COMP. DEL TANQUE	2	MXR
3J1–24240–10	.GRAFICO, DEL TANQUE	1	PARA MXR

5. Debe tenerse en cuenta que las ilustraciones sirven como guia para la búsqueda de los números de partes y no deben usarse para el montaje. Durante el montaje, se recomienda usar el manual de taller correspondiente.

6. EL asterisco (*) antes del número de referencia indica los elementos modificados después de la primera edición.

FOREWORD

This Parts Catalogue is related to the parts for the model(s) on the cover page. When you are ordering replacement parts, please refer to this Parts Catalogue and quote both part numbers and part names correctly.

1. Modifications or additions which have been made after the issue of the Parts Catalogue will be announced in the Parts News.
   It is advisable that you make the necessary corrections to the Parts Catalogue according to the Parts News.

2. Abbreviations
   The following abbreviations are used in this Parts Catalogue.

   "UR" Use specified parts number.

   "UN" Use as many as needed.

   "AP" Alternate Parts

   "LM" Locally Made (Parts need to be ordered locally)

   "F#" Frame No. (Applicable machine No.)

   "O/S" Over Size

3. The number of components for assembly
   - Parts, which are to be supplied in an assembly, are listed with a dot (.) in front of the part name as shown below.
   - The numeral appearing to the right of each component part indicates the quantity of parts for each assembly unit.

PART NO.	DESCRIPTION	Q'TY	REMARKS
2F5–83310–60	FRONT FLASHER LIGHT ASSY	2	
115–83311–60	.BULB (6V–18W)	1	

4. Applicable colours of graphics are represented in the "REMARKS" as shown below.

PART NO.	DESCRIPTION	Q'TY	REMARKS
2N4–24110–00–X5	FUEL TANK COMP.	2	MXR
3J1–24240–10	.GRAPHIC, FUEL TANK	1	FOR MXR

5. Note that the illustrations for reference in finding parts numbers are not to be used for assembling. When assembling, please use the applicable service manual.

6. The asterisk (*) before a reference number indicates modified items after the first edition.

7. Números de serie

Nº de Serie del bastidor

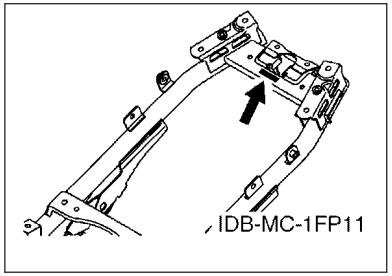

Nº de Serie del motor

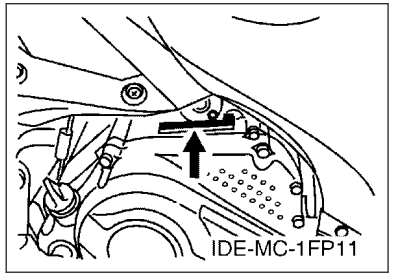

8. Códigos de color aplicables (El símbolo (*) muestra el color de modelo.)

Abreviatura	Nombre de color	Código de color
RM7(*)	RED METALLIC 7	1218
SMX(*)	BLACK METALLIC X	0903
WM6(*)	BLANCO METALICO 6	1124
WM6(*)	WHITE METALLIC 6	1124
YB	YAMAHA BLACK	0033

9. Nº de serie inicial aplicable

Nº de Serie del bastidor

Nº de serie	Nombre de la columna de cantidades	Código de Modelo

Nº de Serie del motor

Nº de serie	Nombre de la columna de cantidades	Código de Modelo

7. Applicable Serial No.

Frame Serial No.

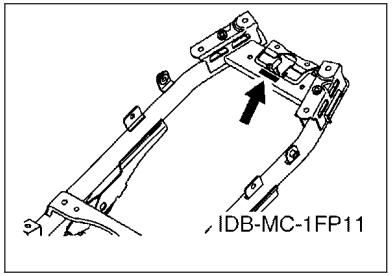

Engine Serial No.

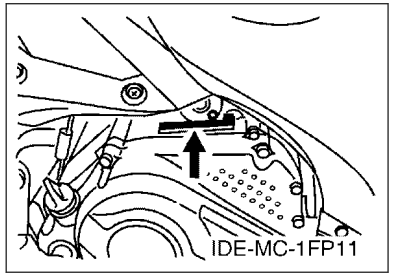

8. Applicable Colour Code (The (*) mark shows Model colour.)

Abbreviation	Colour Name	Colour Code
RM7(*)	RED METALLIC 7	1218
SMX(*)	BLACK METALLIC X	0903
WM6(*)	BLANCO METALICO 6	1124
WM6(*)	WHITE METALLIC 6	1124
YB	YAMAHA BLACK	0033

9. Applicable Starting Serial No.

Frame Serial No.

Serial No.	Name Of Q'ty Column	Model Code

Engine Serial No.

Serial No.	Name Of Q'ty Column	Model Code

CONTENIDO

MOTOR

CULATA DE CILINDRO..... 1
CIGUENAL & PISTON.....2
VALVULA.....3
ARBOL DE LEVAS & CADENA.....4
BOMBA DE ACEITE.....5
ADMISION.....6
DESCARGA.....8
CARTER.....9
CUBIERTA DE CARTER 1.....10
ARRANQUE..... 11
EMBRAGUE DEL ARRANQUE.....12
EMBRAGUE..... 13
TRANSMISION.....14
LEVA DE CAMBIO & HORQUILLA..... 16
EJE DE CAMBIO & PEDAL.....17

SHASIS

CUADRO..... 18
GUARDABARRO.....19
CUBIERTA LATERAL.....20
BRAZO TRASERO & SUSPENSION.....22
DIRECCION.....23
HORQUILLA DELANTERA..... 24
DEPOSITO DE COMBUSTIBLE..... 25
ASIENTO.....26
RUEDA DELANTERA.....27
CALIBRE FRENO DELANTERA..... 28
RUEDA TRASERA..... 29
MANILLAR & CABLE.....31
CILINDRO MAESTRO DELANTERO.....32
SOPORTE & APOYAPIE.....33
PATA PROTEGIDA..... 35
GENERADOR.....37
MOTOR DE ARRANQUE.....38
LUZ DE DESTELLADOR.....39
MEDIDOR.....40
FARO DELANTERO.....41
LUZ DE COLA..... 42
INTERRUPTOR DE MANILLAR&PALANC..... 43
EQUIPO ELECTRICO 1..... 44
EQUIPO ELECTRICO 2..... 45

INDICE

INDICE NUMERICO..... 46

CONTENTS

ENGINE

CYLINDER HEAD....1
CRANKSHAFT & PISTON....2
VALVE....3
CAMSHAFT & CHAIN....4
OIL PUMP....5
INTAKE....6
EXHAUST....8
CRANKCASE....9
CRANKCASE COVER 1....10
STARTER....11
STARTER CLUTCH....12
CLUTCH....13
TRANSMISSION....14
SHIFT CAM & FORK....16
SHIFT SHAFT....17

CHASSIS

FRAME....18
FENDER....19
SIDE COVER....20
REAR ARM & SUSPENSION....22
STEERING....23
FRONT FORK....24
FUEL TANK....25
SEAT....26
FRONT WHEEL....27
FRONT BRAKE CALIPER....28
REAR WHEEL....29
STEERING HANDLE & CABLE....31
FRONT MASTER CYLINDER....32
STAND & FOOTREST....33
LEG SHIELD....35
GENERATOR....37
STARTING MOTOR....38
FLASHER LIGHT....39
METER....40
HEADLIGHT....41
TAILLIGHT....42
HANDLE SWITCH & LEVER....43
ELECTRICAL 1....44
ELECTRICAL 2....45

INDEX

NUMERICAL INDEX....46

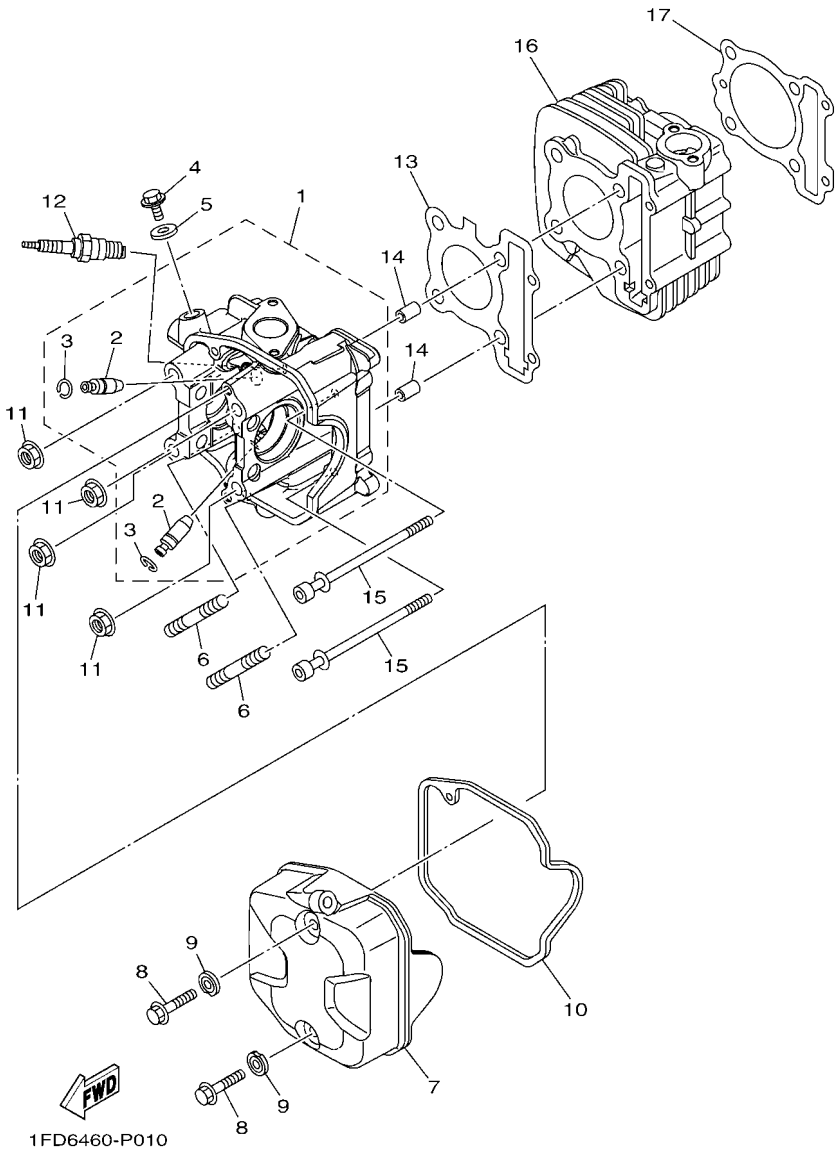

FIG. 1 CULATA DE CILINDRO — CYLINDER HEAD

REF. Nº	CODIGO Nº PART NO.	DESCRIPCION DESCRIPTION	BF24					OBSERVACIONES REMARKS
1	1FD–E1102–10	CULATA DE CILINDRO COMPLETA CYLINDER HEAD ASSY	1					
2	54P–E1133–10	.GUIA DE VALVULA 1 .GUIDE, VALVE 1	2					
3	93440–10153	.SEGURO .CIRCLIP	2					
4	95E32–10014	CERROJO, REBORDE HUECO PROFUND BOLT, FLANGE DEEP RECESS	1					
5	90430–10807	JUNTA GASKET	1					
6	95612–08625	PERNO DE PUNTAL BOLT, STUD	2					
7	1FD–E1191–00	TAPA CULATA DE CILINDRO 1 COVER, CYLINDER HEAD 1	1					
8	95D32–06030	CERROJO, REBORDE HUECO PROFUND BOLT, FLANGE DEEP RECESS	2					
9	54P–E1173–00	ARANDELA SELLO WASHER, SEALING	2					UR UR
	1FC–E1173–00	ARANDELA SELLO WASHER, SEALING	2					UR UR
10	1FD–E1193–00	EMPAQUE GASKET, HEAD COVER 1	1					
11	90179–08518	TUERCA NUT	4					
12	94700–00372	BUJIA (NGK CR6HSA) PLUG, SPARK (NGK CR6HSA)	1					
13	54P–E1181–00	JUNTA, DE CULATA 1 GASKET, CYLINDER HEAD 1	1					
14	91810–14809	PASADOR DE CLAVIJA PIN, DOWEL	2					
15	90110–06868	TORNILLO ALLEN BOLT, HEXAGON SOCKET HEAD	2					
16	2SU–E1310–00	CILINDRO CYLINDER	1					
17	1FC–E1351–00	JUNTA, DE CILINDRO GASKET, CYLINDER	1					

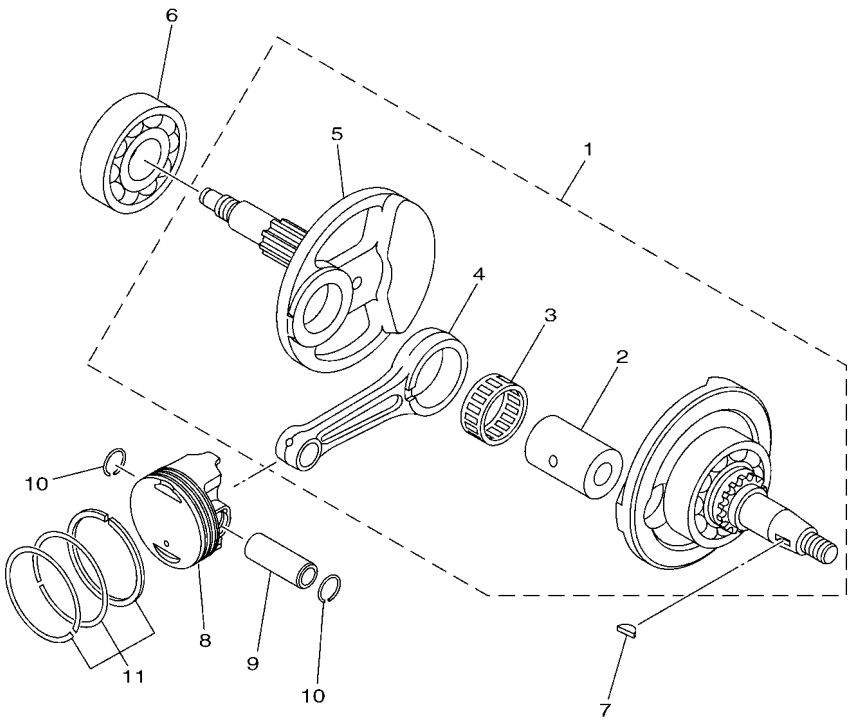

1DY1460-L020

FIG. 2 CIGUENAL & PISTON — CRANKSHAFT & PISTON

REF. Nº	CODIGO Nº PART NO.	DESCRIPCION DESCRIPTION	BF24					OBSERVACIONES REMARKS
1	1DY–WE140–10	CIGUENAL COMPLETO CRANKSHAFT ASSY	1					
2	1DY–E1681–00	.PASADOR MANIVELA 1 .PIN, CRANK 1	1					
3	93310–528YA	.COJINETE DE RODILLOS .BEARING	1					
4	1DY–E1651–00	.BIELA .ROD, CONNECTING	1					
5	1DY–E1422–10	.MANIVELA 2 .CRANK 2	1					
6	93306–355Y2	COJINETE BEARING	1					
7	90280–03017	CUNA WOODRUFF KEY, WOODRUFF	1					
8	1DY–E1631–10	PISTON (NORMA) PISTON (STD)	1					
	1DY–E1636–09	PISTON (0.50MM O/S) PISTON (0.50MM O/S)	1					AP AP
	1DY–E1638–09	PISTON (1.00MM O/S) PISTON (1.00MM O/S)	1					AP AP
9	54P–E1633–10	PASADOR, PISTON PIN, PISTON	1					
10	93450–14088	SEGURO CIRCLIP	2					
11	1DY–E1603–10	JUEGO DE ANILLOS (NORMA) PISTON RING SET (STD)	1					
	1DY–E1605–10	JUEGO DE ANILLOS (0.50MM O/S) PISTON RING SET (0.50MM O/S)	1					AP AP
	1DY–E1607–10	JUEGO DE ANILLOS (1.00MM O/S) PISTON RING SET (1.00MM O/S)	1					AP AP

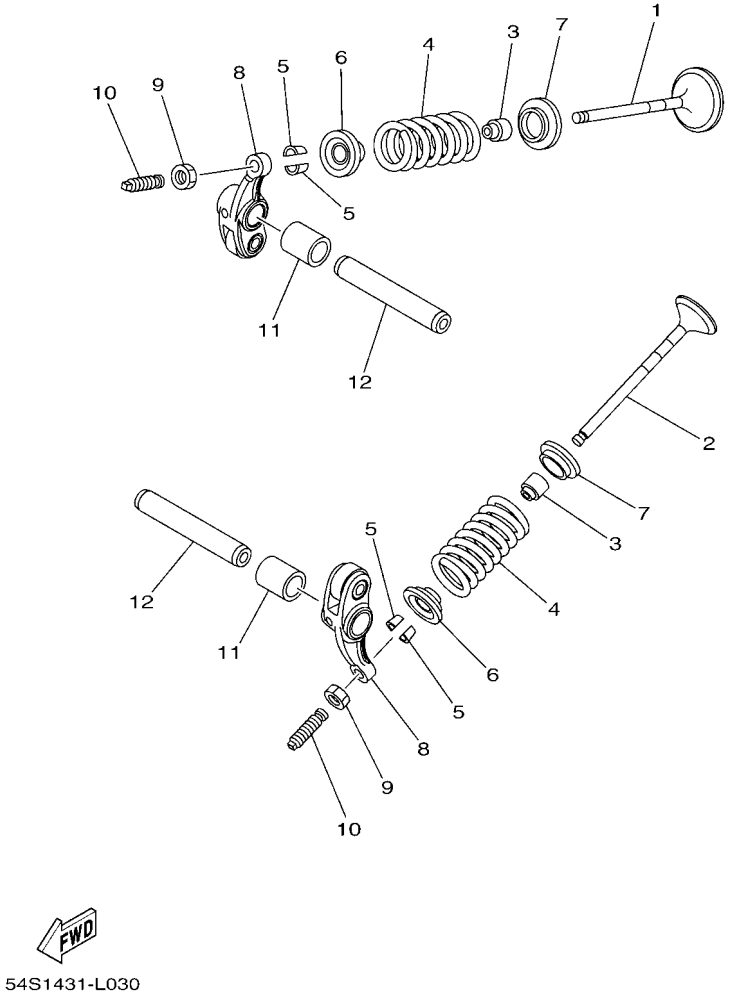

FIG. 3 VALVULA — VALVE

REF. Nº	CODIGO Nº PART NO.	DESCRIPCION DESCRIPTION	BF24					OBSERVACIONES REMARKS
1	2PH–E2111–00	VALVULA DE ADMISION VALVE, INTAKE	1					
2	1FD–E2121–00	VALVULA DE ESCAPE VALVE, EXHAUST	1					
3	54P–E2119–00	SELLO DE ACEITE VALVULA SEAL, VALVE STEM	2					
4	2XC–E2113–00	RESORTE VALVULA INTERNA SPRING, VALVE INNER	2					
5	5TL–E2118–00	SEGURO DE VALVULA LOCK, VALVE SPRING RETAINER	4					
6	1KP–E2117–00	RETEN RESORTE DE VALVULA RETAINER, VALVE SPRING	2					
7	2PH–E2126–00	ASIENTO RESORTE DE VALVULA2 SEAT, VALVE SPRING 2	2					
8	2PH–E2151–00	BRAZO DE BALANCIN DE VALVULA ARM, VALVE ROCKER	2					
9	90170–05803	TUERCA NUT	2					
10	33S–E2159–01	TORNILLO DE AJUSTE DE VALVULA SCREW, VALVE ADJUSTING	2					
11	44D–E2662–00	COLLAR 1 COLLAR 1	2					
12	54P–E2146–00	ARBOL DE BALANCIN SHAFT, ROCKER	2					

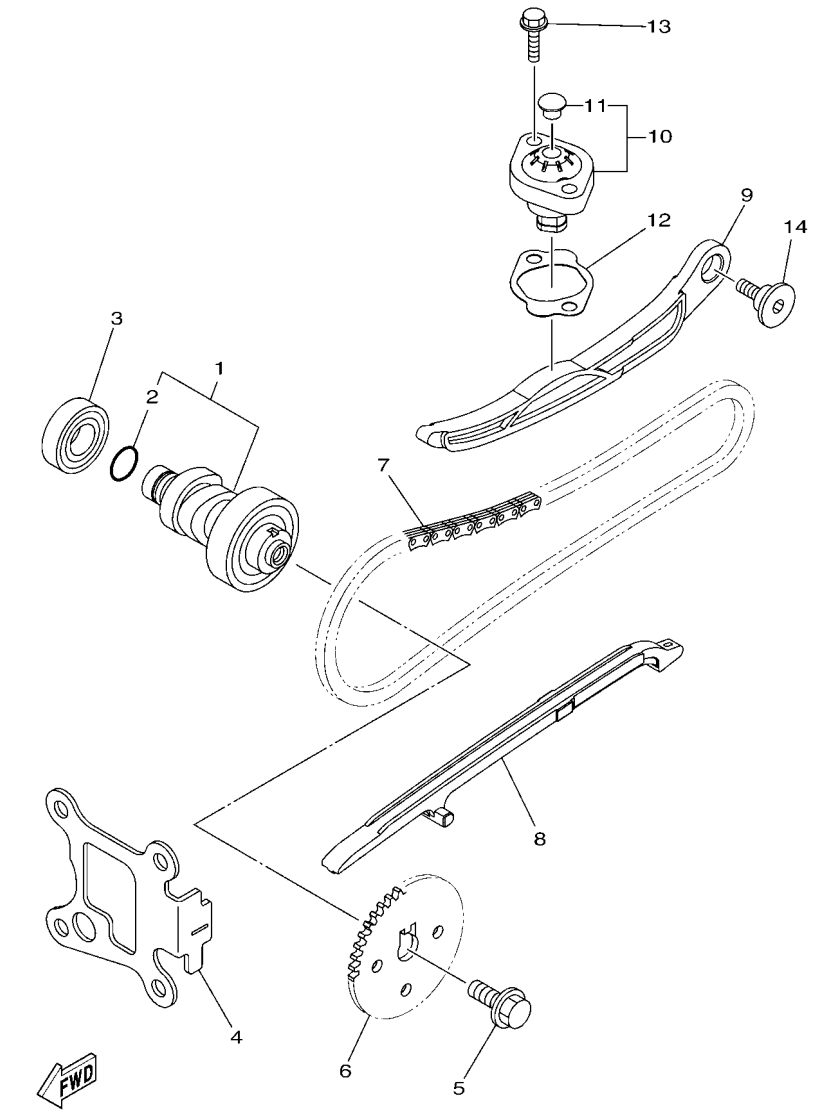

1FDH460-T040

FIG. 4 ARBOL DE LEVAS & CADENA — CAMSHAFT & CHAIN

REF. Nº	CODIGO Nº PART NO.	DESCRIPCION DESCRIPTION	BF24					OBSERVACIONES REMARKS
1	1DY–E2170–10	ARBOL DE LEVAS COMPLETO 1 CAMSHAFT ASSY 1	1					
2	93210–12801	.ANILLO O .O-RING	1					
3	93306–002XK	COJINETE BEARING	1					
4	54P–E111F–00	PLACA PLATE	1					
5	90105–088E1	TORNILLO BOLT, FLANGE	1					
6	1DY–E2176–00	CATALINA DE CADENA SPROCKET, CAM CHAIN	1					
7	94568–H5090	CADENA CHAIN	1					
8	54P–E2231–00	TOPE DE GUIA 1 GUIDE, STOPPER 1	1					
9	54P–E2241–00	TOPE DE GUIA 2 GUIDE, STOPPER 2	1					
10	2PH–E2210–00	TENSOR CADENA DE LEVA TENSIONER ASSY, CAM CHAIN	1					
11	5MX–E2222–00	.TAPON .PLUG	1					
12	2SU–E2213–00	EMPAQUE DE CAJA TENSOR GASKET, TENSIONER CASE	1					
13	95E32–06020	CERROJO, REBORDE HUECO PROFUND BOLT, FLANGE DEEP RECESS	2					
14	52B–E2228–00	PERNO BOLT	1					

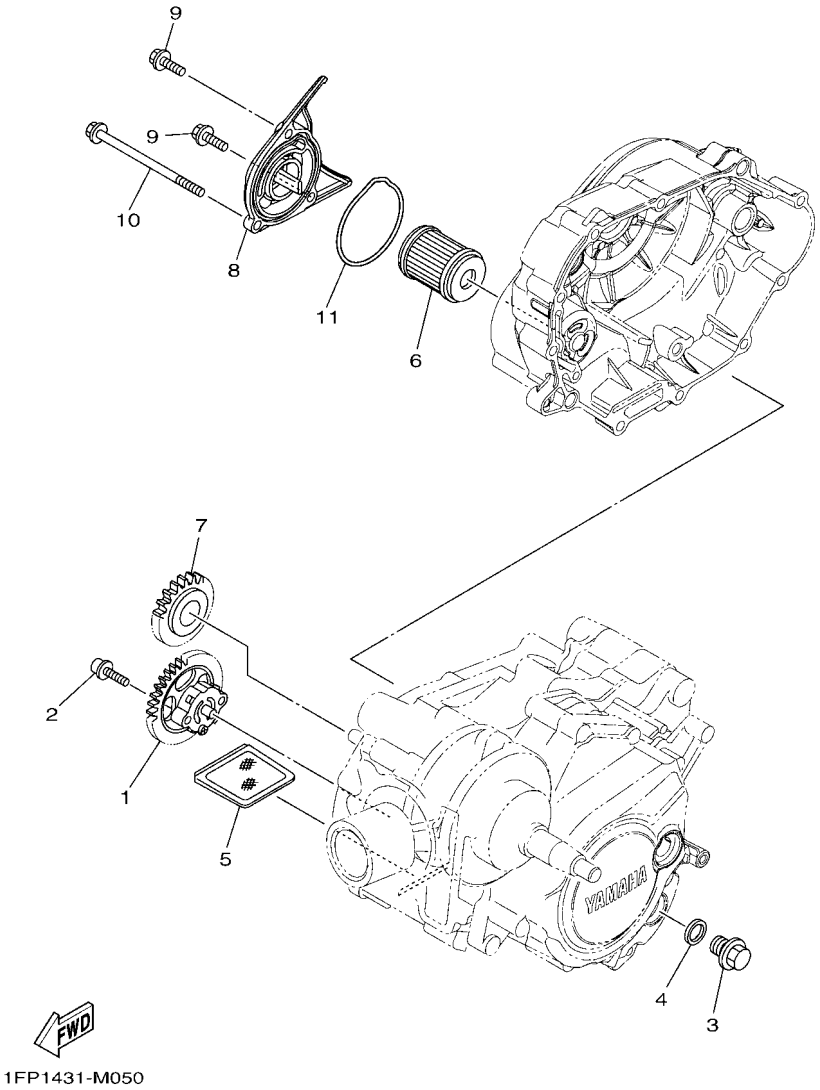

FIG. 5 BOMBA DE ACEITE — OIL PUMP

REF. Nº	CODIGO Nº PART NO.	DESCRIPCION DESCRIPTION	BF24					OBSERVACIONES REMARKS
1	1DY–E3300–00	BOMBA DE ACEITE COMPLETA OIL PUMP ASSY	1					
2	90110–05801	TORNILLO ALLEN BOLT, HEXAGON SOCKET HEAD	2					
3	90340–12816	TORNILLO, DE DRENAJE PLUG, STRAIGHT SCREW	1					
4	90430–12803	JUNTA GASKET	1					
5	4LS–E3411–00	FILTRO DE ACEITE STRAINER, OIL	1					UR UR
	4ST–E3411–00	FILTRO DE ACEITE STRAINER, OIL	1					UR UR
6	38B–E3440–00	ELEMENTO FILTRO DE ACEITE ELEMENT ASSY, OIL CLEANER	1					UR UR
	1S7–E3440–00	ELEMENTO FILTRO DE ACEITE ELEMENT ASSY, OIL CLEANER	1					UR UR
7	5D9–E3324–00	ENGRANAJE TRACC. DE BOMBA GEAR, PUMP DRIVE	1					
8	1FD–E3447–00	TAPA DEL ELEMENTO COVER, OIL ELEMENT	1					
9	95E32–06020	CERROJO, REBORDE HUECO PROFUND BOLT, FLANGE DEEP RECESS	2					
10	95E32–06100	CERROJO, REBORDE HUECO PROFUND BOLT, FLANGE DEEP RECESS	1					
11	93210–60800	ANILLO O O-RING	1					

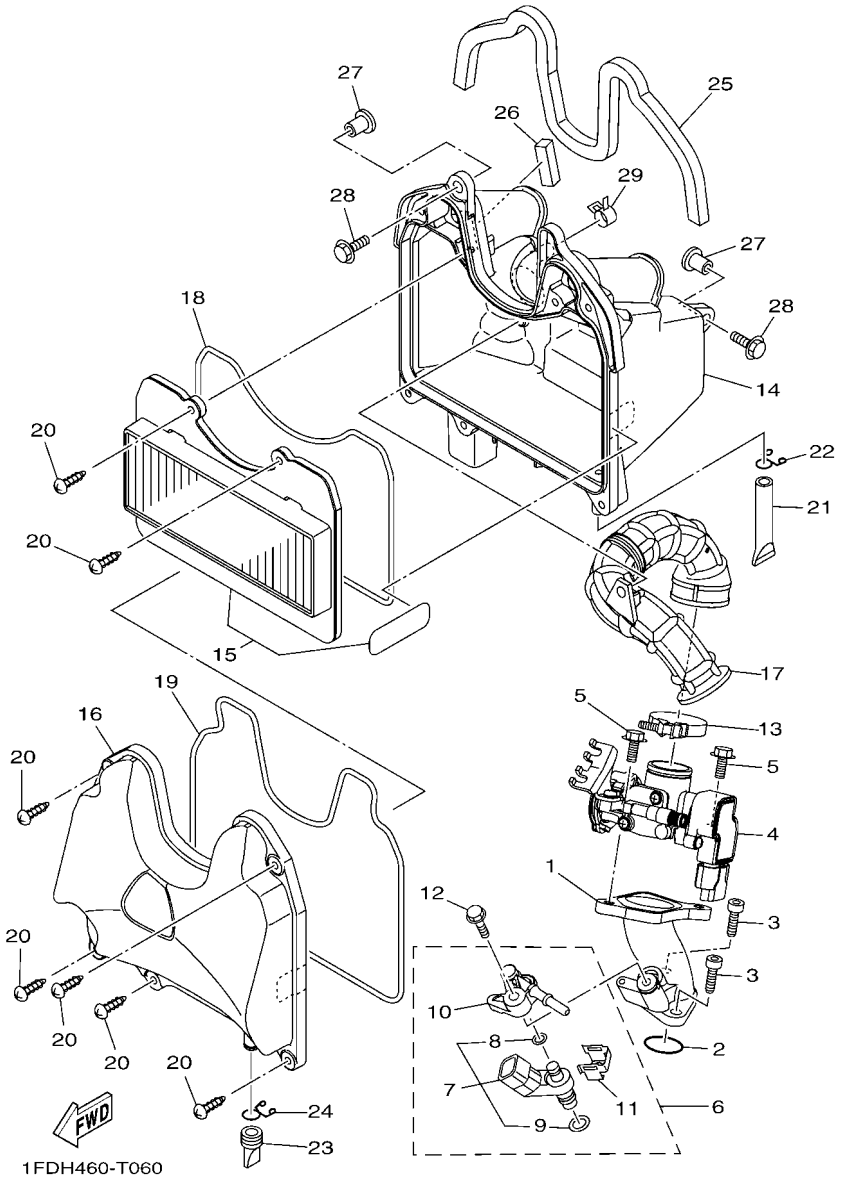

FIG. 6 ADMISION INTAKE

REF. Nº	CODIGO Nº PART NO.	DESCRIPCION DESCRIPTION	BF24					OBSERVACIONES REMARKS
1	1FD–E3585–10	MULTIPLE MANIFOLD	1					
2	93210–27804	ANILLO O O-RING	1					
3	91332–06020	PERNO BOLT	2					
4	1FD–E3750–10	CAJA DE ACELERADOR COMPL. THROTTLE BODY ASSY	1					
5	95E32–06020	CERROJO, REBORDE HUECO PROFUND BOLT, FLANGE DEEP RECESS	2					
6	2SU–E3770–00	INYECTOR INJECTOR ASSY	1					
7	2SU–E3761–00	.INYECTOR .INJECTOR	1					
8	2SU–E4147–00	..ANILLO O ..O-RING	1					
9	2SU–E41A1–00	..ANILLO DE SELLO ..SEAL RING	1					
10	2SU–E3938–00	.TUBO DE ADMISION .PIPE	1					
11	1ST–E4137–00	.PRESILLA .CLIP	1					
12	95D32–06025	CERROJO, REBORDE HUECO PROFUND BOLT, FLANGE DEEP RECESS	1					
13	54P–E3575–00	BANDA BAND	1					
14	1FD–E4411–10	CAJA FILTRO DEL AIRE 1 CASE, AIR CLEANER 1	1					
15	1FD–WE445–00	ELEMENTO DEL FILTRO DEL AIRE AIR CLEANER ELEMENT ASSY	1					
16	1FD–E4412–00	TAPA CAJA DEL FILTRO 1 CAP, CLEANER CASE 1	1					
17	1FD–E4453–10	UNION DEL FILTRO DEL AIRE 1 JOINT, AIR CLEANER 1	1					
18	1FD–E4462–00	SELLO SEAL	1					
19	1FD–E4452–00	SELLO SEAL	1					
20	97702–50030	TORNILLO ROSCA HEMBRA SCREW, TAPPING	7					
21	4ST–E443E–00	TUBO, DRENAJE PIPE, DRAIN	1					
22	90467–110A3	PRESILLA CLIP	1					
23	5D9–E443G–00	TUBO, DRENAJE 2 PIPE, DRAIN 2	1					
24	90467–12802	PRESILLA CLIP	1					
25	1FD–E4426–00	AMORTIGUADOR 2 DAMPER 2	1					
26	1FD–E442G–00	AMORTIGUADOR 3 DAMPER 3	1					
27	90387–06803	ESPACIADOR COLLAR	2					

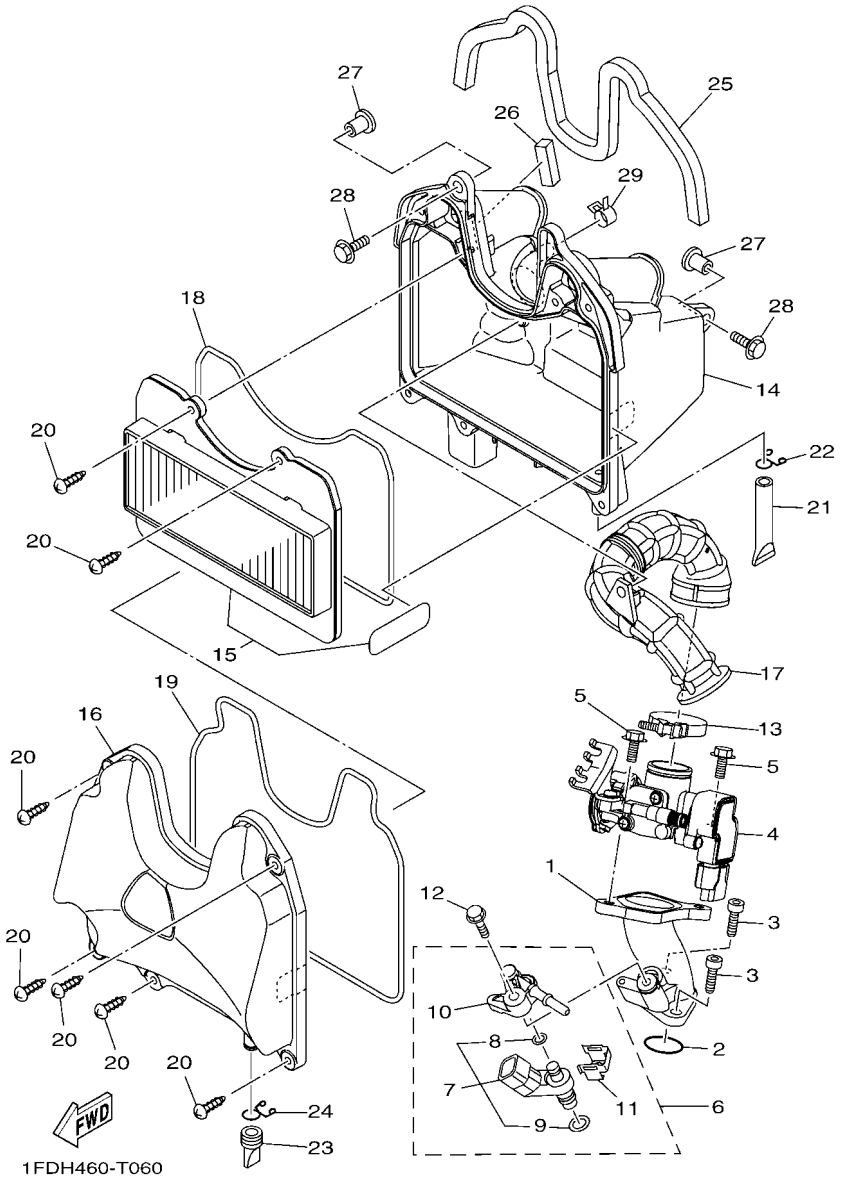

FIG. 6 ADMISION — INTAKE

REF. Nº	CODIGO Nº PART NO.	DESCRIPCION DESCRIPTION	BF24					OBSERVACIONES REMARKS
28	90119–06810	TORNILLO CON ARANDELA BOLT, WITH WASHER	2					
29	90467–13808	PRESILLA CLIP	1					

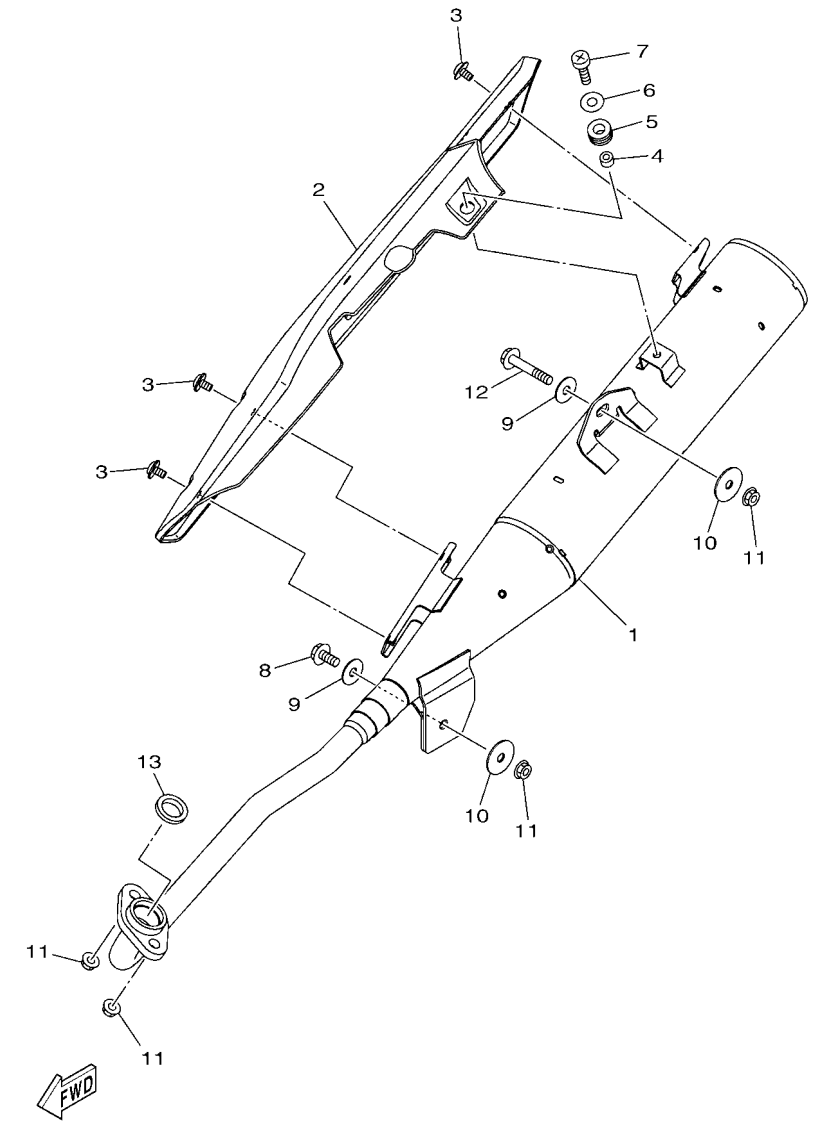

1FD1460-M070

FIG. 7 DESCARGA EXHAUST

REF. Nº	CODIGO Nº PART NO.	DESCRIPCION DESCRIPTION	BF24					OBSERVACIONES REMARKS
1	1FD–E4711–10	SILENCIADOR 1 MUFFLER 1	1					
2	1FD–E4718–00	PROTECTOR DE SILENCIADOR 1 PROTECTOR, MUFFLER 1	1					
3	90111–06807	TORNILLO BOLT,HEX. SOCKET BUTTON	3					
4	90387–06023	ESPACIADOR COLLAR	1					
5	90480–12581	TAPON GROMMET	1					
6	90201–06079	ARANDELA PLANA WASHER, PLATE	1					
7	98980–06016	TORNILLO DE LIGAR SCREW, BIND	1					
8	95D02–08020	CERROJO, REBORDE HUECO PROFUND BOLT, FLANGE DEEP RECESS	1					
9	90201–08055	ARANDELA PLANA WASHER, PLATE	2					
10	90201–08116	ARANDELA PLANA WASHER, PLATE	2					
11	95702–08500	TUERCA DE BRIDA NUT, FLANGE	4					
12	95D32–08040	CERROJO, REBORDE HUECO PROFUND BOLT, FLANGE DEEP RECESS	1					
13	14D–E4613–00	JUNTA, TUBO DE ESCAPE GASKET, EXHAUST PIPE	1					

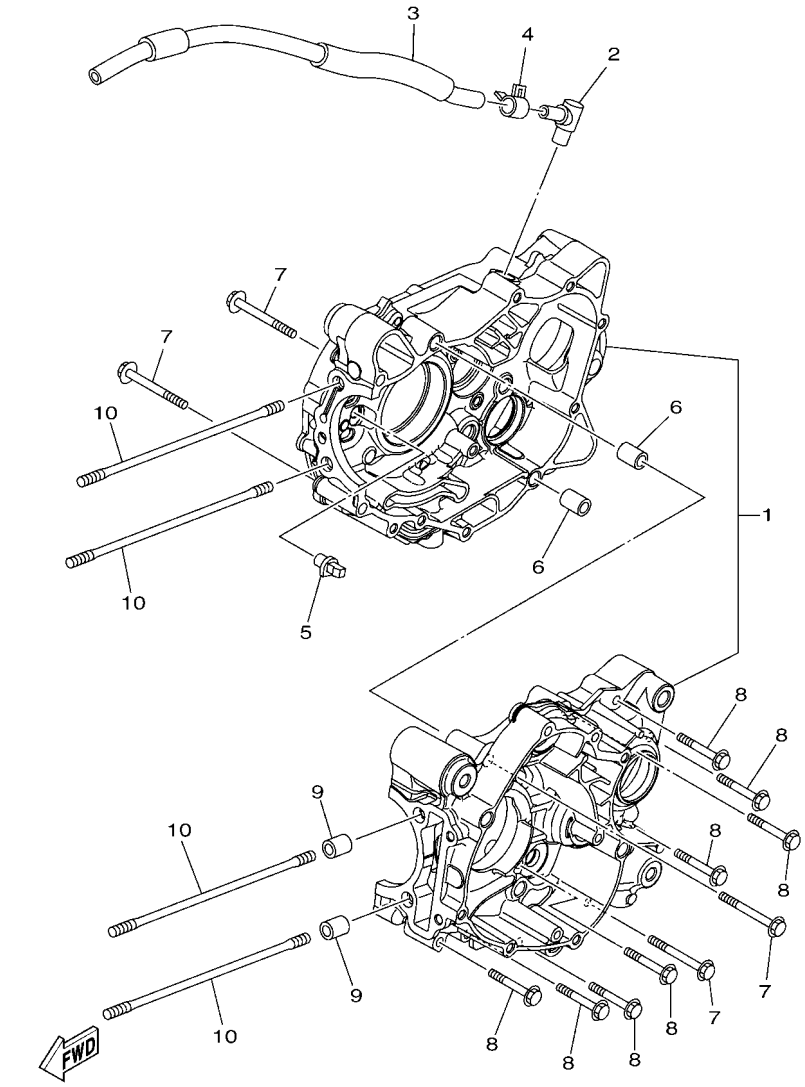

FIG. 8 CARTER — CRANKCASE

REF. Nº	CODIGO Nº PART NO.	DESCRIPCION DESCRIPTION	BF24					OBSERVACIONES REMARKS
1	1DY–E5150–00	CARTER COMPLETO CRANKCASE ASSY	1					
2	4ST–E5371–00	RESPIRADERO BREATHER	1					
3	1FD–E1166–10	TUBO RESPIRADERO 1 PIPE, BREATHER 1	1					
4	90467–13808	PRESILLA CLIP	1					
5	5D9–E5155–00	BOQUILLA 3 NOZZLE 3	1					
6	91810–14809	PASADOR DE CLAVIJA PIN, DOWEL	2					
7	95E32–06055	CERROJO, REBORDE HUECO PROFUND BOLT, FLANGE DEEP RECESS	4					
8	95E32–06040	CERROJO, REBORDE HUECO PROFUND BOLT, FLANGE DEEP RECESS	8					
9	91810–14809	PASADOR DE CLAVIJA PIN, DOWEL	2					
10	90116–08843	ESPARRAGO BOLT, STUD	4					

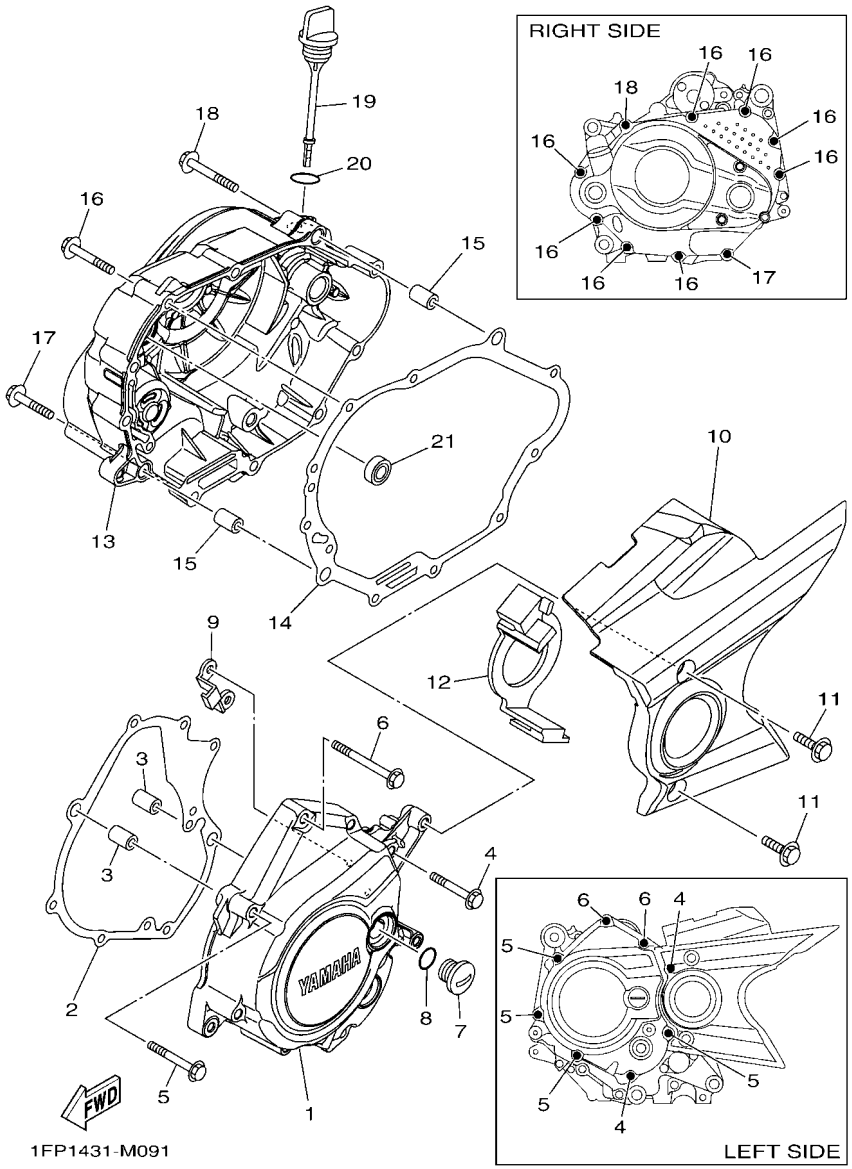

FIG. 9 CUBIERTA DE CARTER 1 — CRANKCASE COVER 1

REF. Nº	CODIGO Nº PART NO.	DESCRIPCION DESCRIPTION	BF24					OBSERVACIONES REMARKS
1	1FD–E5411–00	CUBIERTA DE CARTER 1 COVER, CRANKCASE 1	1					
2	1FC–E5451–10	EMPAQ DE CUBIERTA DE CARTER GASKET, CRANKCASE COVER 1	1					
3	91810–14809	PASADOR DE CLAVIJA PIN, DOWEL	2					
4	90105–06893	TORNILLO BOLT, FLANGE	2					
5	95E32–06050	CERROJO, REBORDE HUECO PROFUND BOLT, FLANGE DEEP RECESS	4					
6	95E32–06060	CERROJO, REBORDE HUECO PROFUND BOLT, FLANGE DEEP RECESS	2					
7	90340–14806	TORNILLO, DE DRENAJE PLUG, STRAIGHT SCREW	1					
8	93210–148F8	ANILLO O O-RING	1					
9	31B–E5113–00	PLACA PLATE	1					
10	1FD–E5418–00	CUBIERTA CAJA DE CADENA COVER, CHAIN CASE	1					
11	95D02–06016	CERROJO, REBORDE HUECO PROFUND BOLT, FLANGE DEEP RECESS	2					
12	16S–E5377–01	GUIA DE ENTRADA GUIDE, INLET	1					
13	1FD–E5421–00	TAPA DE CARTER DERECHA COVER, CRANKCASE 2	1					
14	1FC–E5461–10	JUNTA TAPA CARTER DERECHO 2 GASKET, CRANKCASE COVER 2	1					
15	91810–14809	PASADOR DE CLAVIJA PIN, DOWEL	2					
16	95E32–06040	CERROJO, REBORDE HUECO PROFUND BOLT, FLANGE DEEP RECESS	8					
17	95E32–06030	CERROJO, REBORDE HUECO PROFUND BOLT, FLANGE DEEP RECESS	1					
18	95E32–06050	CERROJO, REBORDE HUECO PROFUND BOLT, FLANGE DEEP RECESS	1					
19	5D9–E5362–10	TAPON DEL NIVEL DE ACEITE PLUG, OIL LEVEL	1					
20	93210–198F9	ANILLO O O-RING	1					
21	93101–10810	SELLO ACEITE OIL SEAL	1					

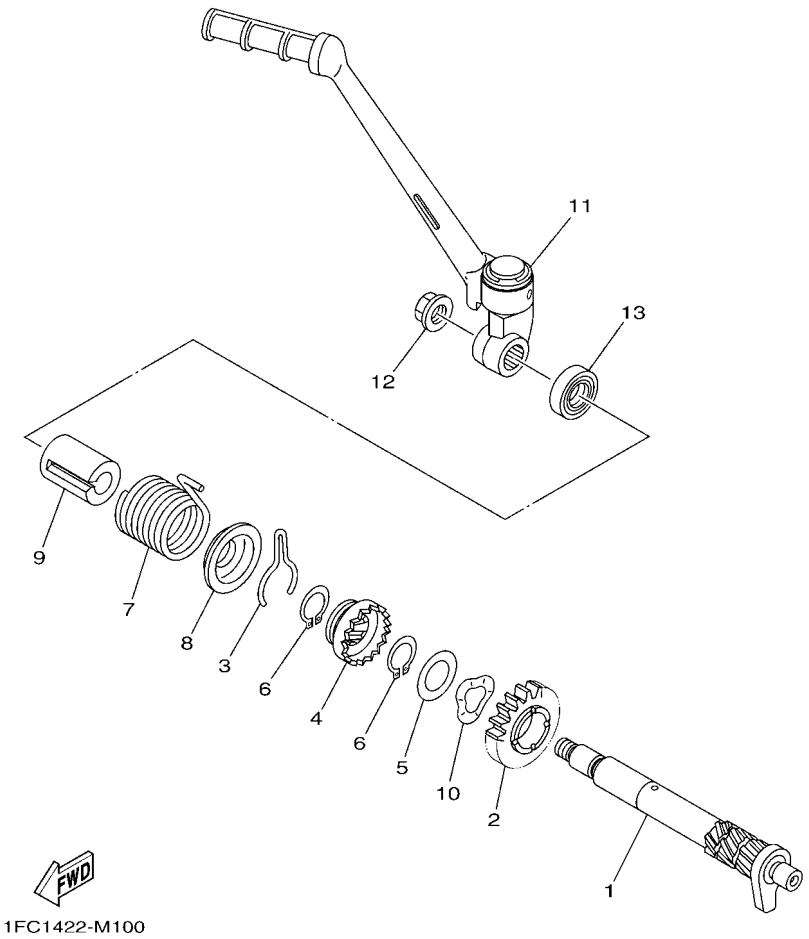

FIG. 10 ARRANQUE STARTER

REF. Nº	CODIGO Nº PART NO.	DESCRIPCION DESCRIPTION	BF24					OBSERVACIONES REMARKS
1	5D9–E5661–20	EJE DE PEDAL DE ARRANQUE AXLE, KICK	1					
2	5D9–E5641–00	ENGRANAJE PEDAL ARRANQUE GEAR, KICK	1					
3	90468–23194	PRESILLA CLIP	1					
4	5D9–E5671–10	RUEDA DE TRINQUETE WHEEL, RATCHET	1					
5	4WH–E5644–00	CUNA SHIM	1					
6	99009–19400	PRESILLA REDONDA CIRCLIP	2					
7	90508–26808	RESORTE DE TORSION SPRING, TORSION	1					
8	5D9–E5645–10	FLACA PLATE	1					
9	5D9–E5664–20	GUIA DE RESORTE GUIDE, SPRING	1					
10	90206–19802	ARANDELA ONDULADA WASHER, WAVE	1					
11	1FD–E5620–00	PEDAL DE ARRANQUE COMPLETO KICK CRANK ASSY	1					
12	90179–10821	TUERCA NUT	1					
13	93102–16801	SELLO ACEITE OIL SEAL	1					

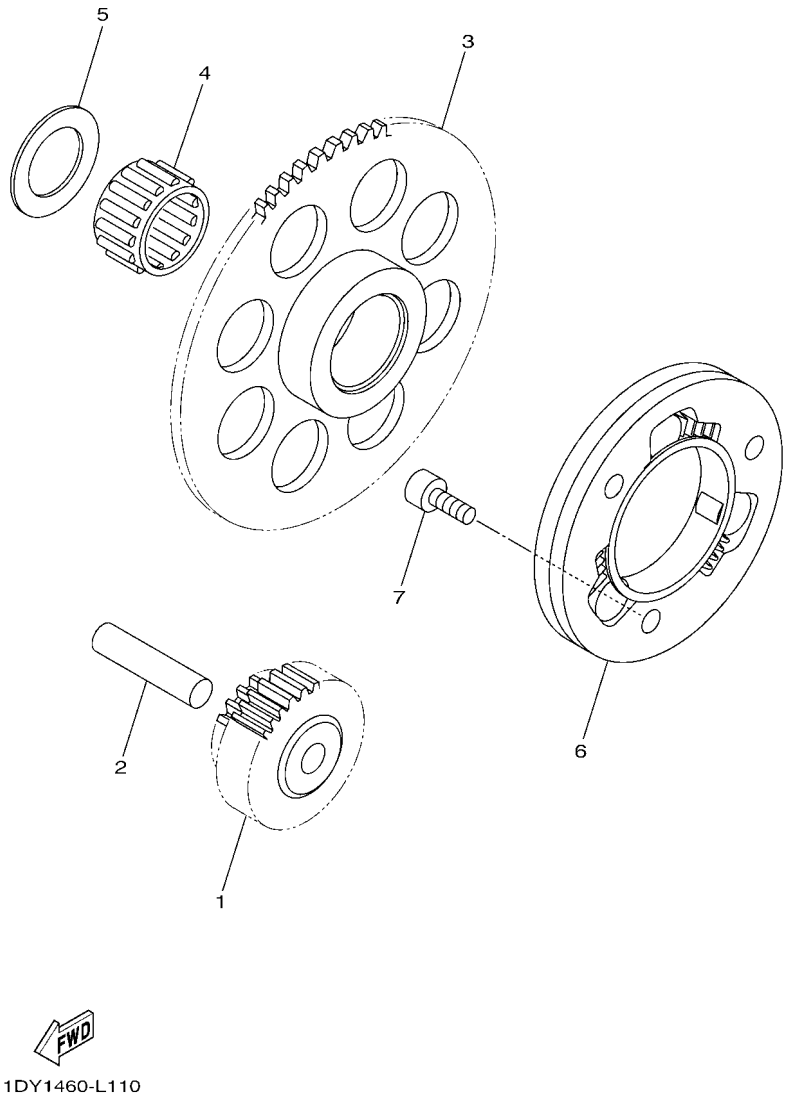

FIG. 11 EMBRAGUE DEL ARRANQUE STARTER CLUTCH

REF. Nº	CODIGO Nº PART NO.	DESCRIPCION DESCRIPTION	BF24					OBSERVACIONES REMARKS
1	2P2–E5512–00	ENGRENAJE NEUTRO GEAR, IDLER 1	1					
2	93608–34800	PASADOR DE CLAVIJA PIN, DOWEL	1					
3	1DY–E5524–00	RUEDA DE ARRANQUE WHEEL, STARTER	1					
4	93310–419X6	COJINETE DE RODILLOS BEARING	1					
5	90201–19801	ARANDELA PLANA WASHER, PLATE	1					
6	1DY–E5580–00	ENSAMBLE EXT.EMBRAGUE ARRANQUE STARTER CLUTCH OUTER ASSY	1					
7	91312–06012	TORNILLO ALLEN BOLT, HEXAGON SOCKET HEAD	3					

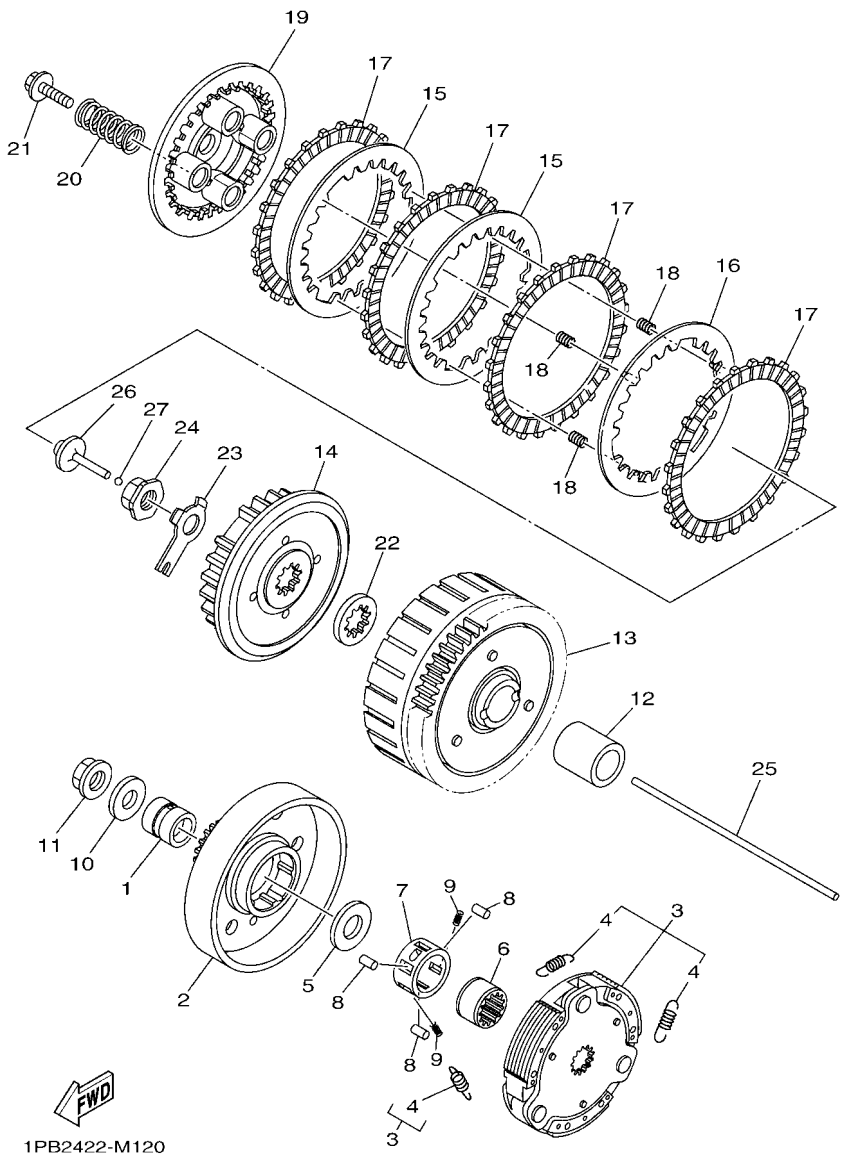

FIG. 12 EMBRAGUE — CLUTCH

REF. Nº	CODIGO Nº PART NO.	DESCRIPCION DESCRIPTION	BF24					OBSERVACIONES REMARKS
1	1FD–E6116–00	COLLAR 1 COLLAR 1	1					
2	1DY–E6611–00	CAJA DE EMBRAGUE COMPLETO CLUTCH HOUSING COMP.	1					
3	1FD–E6620–00	PORTADOR DE EMBRAGUE COMPLETO CLUTCH CARRIER ASSY	1					
4	1FD–E6626–00	.RESORTE CONTRAPESO EMBRAGUE 1 .SPRING, CLUTCH WEIGHT 1	3					
5	90201–167P7	ARANDELA PLANA WASHER, PLATE	1					
6	5LM–E6512–00	COPA DE CAJA DE EMBRAGUE BOSS, CLUTCH HOUSING	1					
7	5D9–E6586–00	MEDITOR CAGE	1					
8	93606–10800	PASADOR DE CLAVIJA PIN, DOWEL	3					
9	90501–04805	RESORTE DE COMPRESION SPRING, COMPRESSION	2					
10	90201–12019	ARANDELA PLANA WASHER, PLATE	1					
11	90179–12802	TUERCA NUT	1					
12	90387–20810	ESPACIADOR COLLAR	1					
13	1FD–E6150–00	CAMPANA DE EMBRAGUE PRIMARY DRIVEN GEAR COMP.	1					
14	1FD–E6371–00	CUBO, DE EMBRAGUE BOSS, CLUTCH	1					
15	1FD–E6324–00	PLACA DE EMBRAGUE PLATE, CLUTCH 1	2					
16	1FD–E6350–00	PLACA DE PRESION COMPLETA PRESSURE PLATE ASSY	1					
17	1FD–E6321–00	PLACA DE FRICCION PLATE, FRICTION	4					
18	1FD–E6383–00	RESORTE.,COJIN SPRING.,CUSHION	3					
19	1FD–E6351–00	PLATO DE PRESION PLATE, PRESSURE 1	1					
20	1PB–E6333–00	RESORTE DE EMBRAGUE 1 SPRING, CLUTCH 1	4					
21	1PB–E6194–00	TORNILLO, CABEZA HEXAGONAL BOLT, HEXAGON WITH WASHER	4					
22	1PB–E6628–00	ARANDELA WASHER	1					
23	1FD–E6135–00	ARANDELA DE CIERRE WASHER, LOCK	1					
24	90179–14001	TUERCA NUT	1					
25	5D9–E6357–00	VARILLA DE EMPUJE 2 ROD, PUSH 2	1					
26	1FD–E6356–00	VARILLA DE EMPUJE 1 ROD, PUSH 1	1					
27	93503–16807	ESFERA BALL	1					

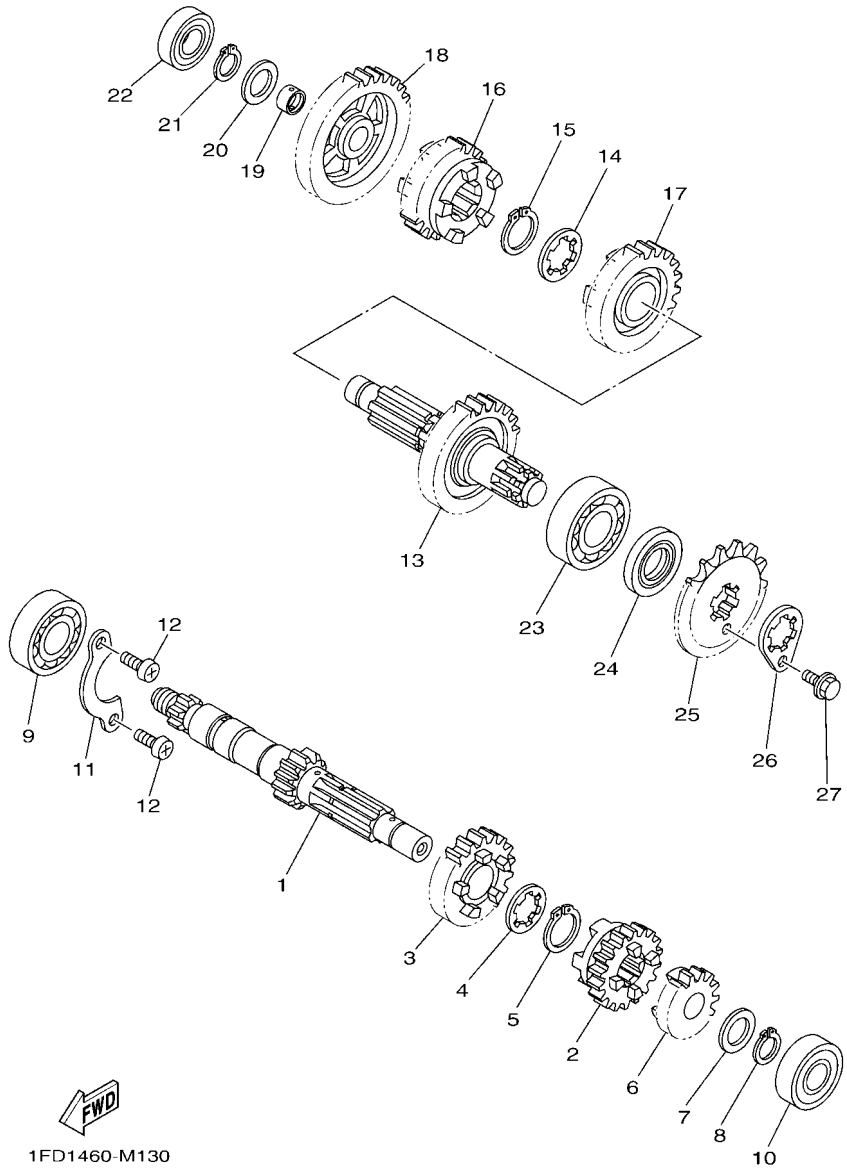

FIG. 13 TRANSMISION — TRANSMISSION

REF. Nº	CODIGO Nº PART NO.	DESCRIPCION DESCRIPTION	BF24					OBSERVACIONES REMARKS
1	1FD–E7411–10	EJE PRIMARIO (12T) AXLE, MAIN (12T)	1					UR UR
	1DY–E7411–00	EJE PRIMARIO (12T) AXLE, MAIN (12T)	1					UR UR
2	1DY–E7131–00	ENGRANAJE PINON DE 3RA (17T) GEAR, 3RD PINION (17T)	1					
3	1DY–E7141–01	ENGRANAJE PINON DE 4TA (22T) GEAR, 4TH PINION (22T)	1					
4	90209–17285	ARANDELA DE SEPARACION WASHER	1					
5	93410–20038	SEGURO CIRCLIP	1					
6	1DY–E7121–01	ENGRANAJE DE PINON DE 2DA(16T) GEAR, 2ND PINION (16T)	1					UR UR
	1DY–E7121–11	ENGRANAJE DE PINON DE 2DA(16T) GEAR, 2ND PINION (16T)	1					UR UR
7	90201–15700	ARANDELA PLANA WASHER, PLATE	1					
8	99009–15400	PRESILLA REDONDA CIRCLIP	1					
9	93306–054Y2	COJINETE BEARING	1					
10	93306–252XR	COJINETE BEARING	1					
11	3C1–E7471–00	PLACA, DE CUBIERTA PLATE, COVER	1					
12	91332–06012	PERNO BOLT	2					
13	1DY–E7402–10	EJE DE TRACCION COMPLETO DRIVE AXLE ASSY	1					
14	90209–18208	ARANDELA DE SEPARACION WASHER	1					
15	93410–22039	SEGURO CIRCLIP	1					
16	1FD–E7241–00	ENGRANAJE DE RUEDA 4TA (23T) GEAR, 4TH WHEEL (23T)	1					
17	1DY–E7231–01	ENGRANAJE RUEDA DE 3RA (23T) GEAR, 3RD WHEEL (23T)	1					
18	1DY–E7211–00	ENGRANAJE RUEDA DE 1 RA (34T) GEAR, 1ST WHEEL (34T)	1					UR UR
	1DY–E7211–10	ENGRANAJE RUEDA DE 1 RA (34T) GEAR, 1ST WHEEL (34T)	1					UR UR
19	90387–15817	ESPACIADOR COLLAR	1					
20	90201–15700	ARANDELA PLANA WASHER, PLATE	1					
21	99009–15400	PRESILLA REDONDA CIRCLIP	1					
22	93306–002XK	COJINETE BEARING	1					
23	93306–254Y1	COJINETE BEARING	1					
24	93102–20892	SELLO ACEITE OIL SEAL	1					

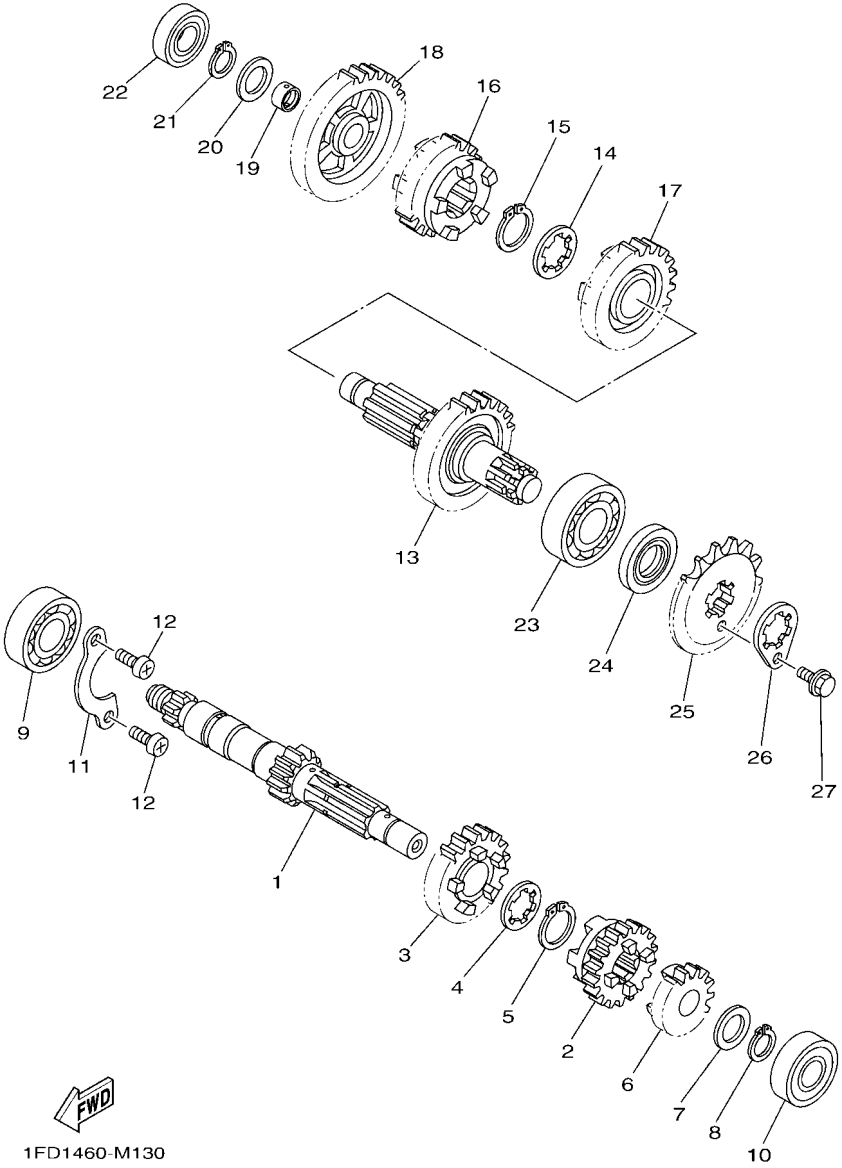

FIG. 13 TRANSMISION — TRANSMISSION

REF. Nº	CODIGO Nº PART NO.	DESCRIPCION DESCRIPTION	BF24					OBSERVACIONES REMARKS
25	93812–14818	CORONA (14T) SPROCKET, DRIVE (14T)	1					
26	1S7–E7456–00	SOPORTE DE CORONA HOLDER, SPROCKET	1					
27	95E32–06010	CERROJO, REBORDE HUECO PROFUND BOLT, FLANGE DEEP RECESS	1					

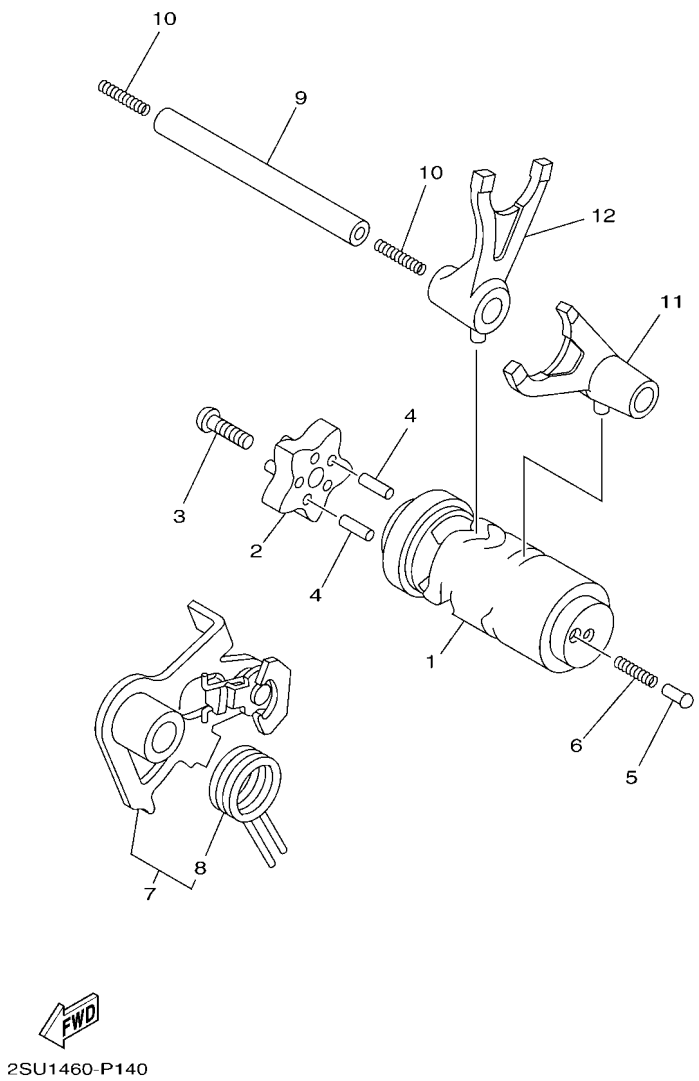

FIG. 14 LEVA DE CAMBIO & HORQUILLA — SHIFT CAM & FORK

REF. Nº	CODIGO Nº PART NO.	DESCRIPCION DESCRIPTION	BF24					OBSERVACIONES REMARKS
1	1FD–E8540–00	LEVA DEL CAMBIO COMPLETA SHIFT CAM ASSY	1					
2	2SU–E8185–00	SEGMENTO DE RETENCION SEGMENT	1					
3	90149–06159	TORNILLO DE REGLAJE SCREW	1					
4	93604–12831	PASADOR DE CLAVIJA PIN, DOWEL	2					
5	5TP–E8542–00	PUNTO MUERTO POINT, NEUTRAL	1					
6	90501–06022	RESORTE DE COMPRESION SPRING, COMPRESSION	1					
7	1JD–E8120–11	PALANCA DE SELECTOR COMPLETO SHIFT LEVER ASSY	1					
8	90508–26815	.RESORTE DE TORSION .SPRING, TORSION	1					
9	5D9–E8531–00	BARRA GUIA HORQ. CAMBIO 1 BAR, SHIFT FORK GUIDE 1	1					
10	90501–06800	RESORTE DE COMPRESION SPRING, COMPRESSION	2					
11	5D9–E8511–00	HORQUILLA DEL CAMBIO 1 FORK, SHIFT 1	1					
12	5D9–E8512–00	HORQUILLA DEL CAMBIO 2 FORK, SHIFT 2	1					

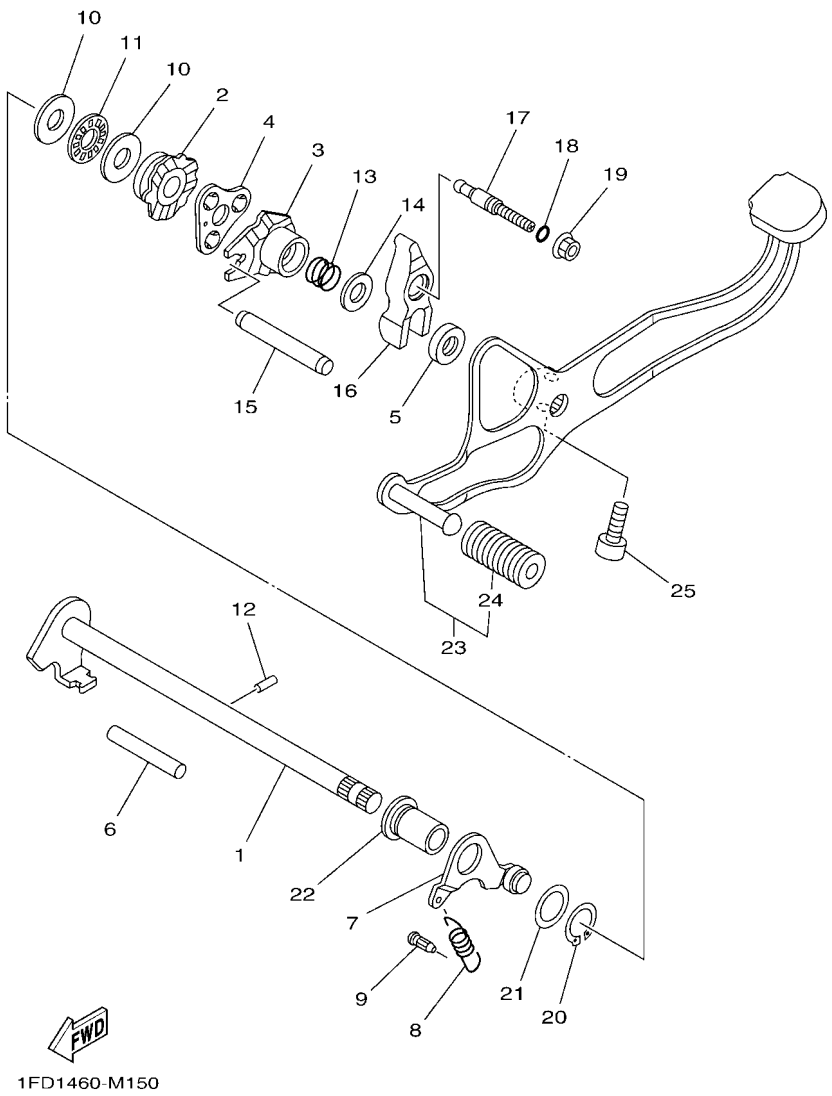

FIG. 15 EJE DE CAMBIO & PEDAL — SHIFT SHAFT

REF. Nº	CODIGO Nº PART NO.	DESCRIPCION DESCRIPTION	BF24					OBSERVACIONES REMARKS
1	1DY–E8101–00	EJE SELECTOR COMPLETO SHIFT SHAFT ASSY	1					
2	1FD–E8179–10	GUIA GUIDE	1					
3	1FD–E8172–10	GUIA DE CAMBIO GUIDE, SHIFT	1					
4	5D9–E8181–00	SOSTEN DE SUJETADOR HOLDER, PAWL	1					
5	93102–12891	SELLO ACEITE OIL SEAL	1					
6	93608–50149	PASADOR DE CLAVIJA PIN, DOWEL	1					
7	1DY–E8140–00	PALANCA DE TOPE COMPLETA STOPPER LEVER ASSY	1					
8	1FD–E8337–00	RESORTE SPRING	1					
9	5HV–E6346–00	GANCHO DE RESORTE HOOK, SPRING	1					
10	90201–127F4	ARANDELA PLANA WASHER, PLATE	2					
11	93340–212Y2	COJINETES CON RODAMIENTOS BEARING	1					
12	93604–10801	PASADOR DE CLAVIJA PIN, DOWEL	1					
13	90501–125E9	RESORTE DE COMPRESION SPRING, COMPRESSION	1					
14	90201–12824	ARANDELA PLANA WASHER, PLATE	1					
15	5LM–E8173–00	PASADOR CAMBIO PIN, SHIFT	1					
16	1FD–E817A–00	BRAZO, DE CAMBIO 3 ARM, SHIFT 3	1					
17	5D9–E8186–00	TORNILLO DE AJUSTE SCREW, ADJUSTING	1					
18	93210–068F7	ANILLO O O-RING	1					
19	95702–06500	TUERCA DE BRIDA NUT, FLANGE	1					
20	99009–17400	PRESILLA REDONDA CIRCLIP	1					
21	90201–178D3	ARANDELA PLANA WASHER, PLATE	1					
22	1DY–E8699–00	COPA 1 BOSS 1	1					
23	BF2–E8110–00	PEDAL DE CAMBIO COMPLETO SHIFT PEDAL ASSY	1					
24	1EG–E8113–01	.FUNDA DEL PEDAL DEL CAMBIO .COVER, SHIFT PEDAL	1					
25	91337–08020	PERNO BOLT	1					

FIG. 16 CUADRO — FRAME

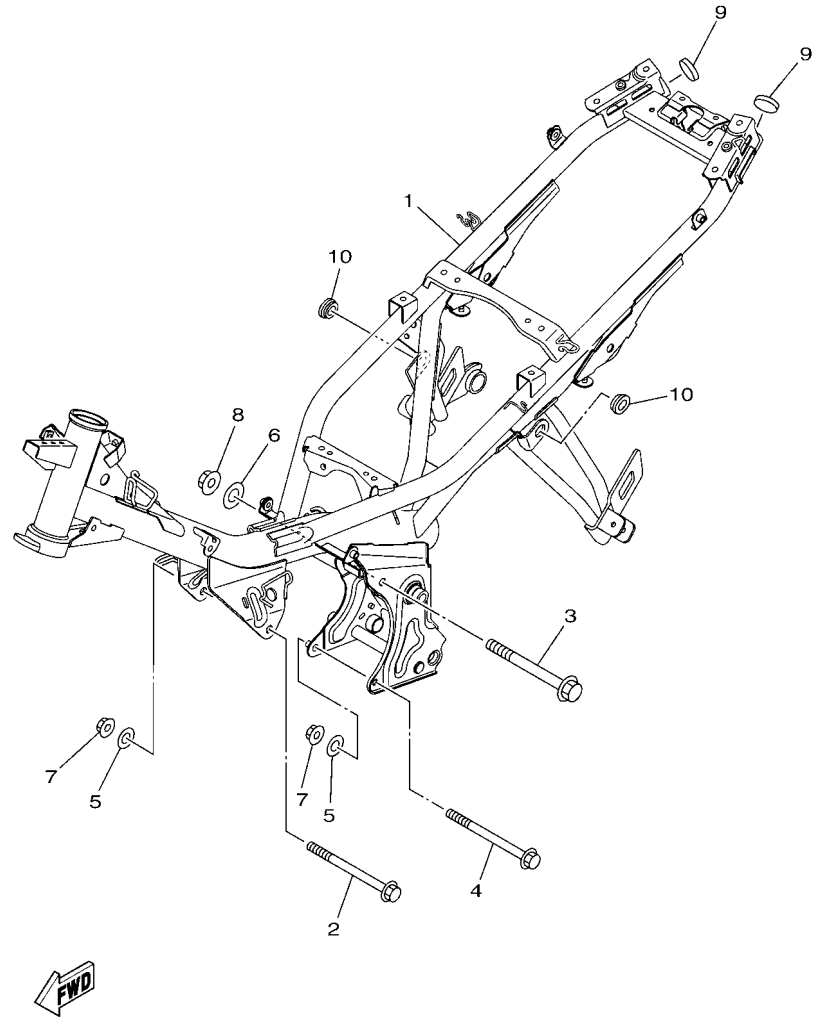

REF. Nº	CODIGO Nº PART NO.	DESCRIPCION DESCRIPTION	BF24					OBSERVACIONES REMARKS
1	BF2–F1110–10	ARMAZON COMPLETO FRAME COMP.	1					
2	90105–088E0	TORNILLO BOLT, FLANGE	1					
3	95812–10120	TORNILLO DE REBORDE BOLT, FLANGE	1					
4	90105–088D9	TORNILLO BOLT, FLANGE	1					
5	90201–08043	ARANDELA PLANA WASHER, PLATE	2					
6	90201–10831	ARANDELA PLANA WASHER, PLATE	1					
7	95602–08200	TUERCA DE AUTO-CIERRE NUT, U FLANGE	2					
8	90179–10805	TUERCA NUT	1					
9	1FD–F139R–00	CUBIERTA 2 COVER 2	2					
10	90480–01559	TAPON GROMMET	2					

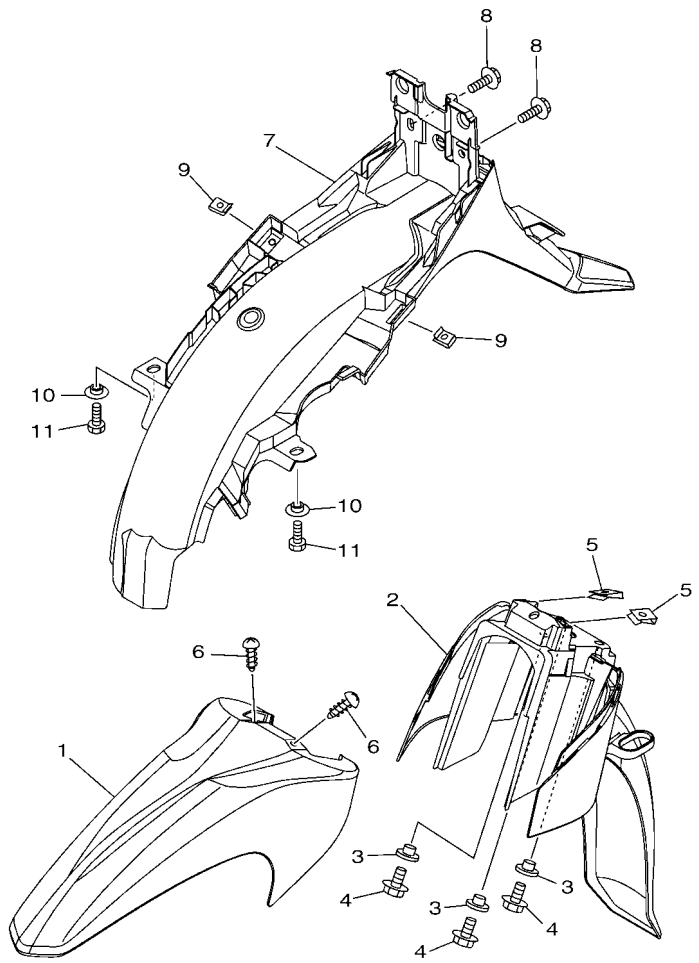

1FP1431-M170

FIG. 17 GUARDABARRO FENDER

REF. Nº	CODIGO Nº PART NO.	DESCRIPCION DESCRIPTION	BF24					OBSERVACIONES REMARKS
1	BF2–F1511–10–P0	GUARDABARRO DELANTERO FENDER, FRONT	1					UR PARA WM6 UR FOR WM6
	BF2–F1511–10–P1	GUARDABARRO DELANTERO FENDER, FRONT	1					UR PARA SMX UR FOR SMX
	BF2–F1511–10–P2	GUARDABARRO DELANTERO FENDER, FRONT	1					UR PARA RM7 UR FOR RM7
2	BF2–F1556–00	GUARDABARRO, DELANTERO 2 FENDER, FRONT 2	1					
3	90387–06857	ESPACIADOR COLLAR	3					
4	97022–06020	PERNO BOLT, HEXAGON	3					
5	90183–05807	TUERCA DE RESORTE NUT, SPRING	2					
6	97702–50012	TORNILLO ROSCA HEMBRA SCREW, TAPPING	2					
7	1FD–F1611–00	GUARDABARRO TRASERO FENDER, REAR	1					
8	90119–068B7	TORNILLO CON ARANDELA BOLT, WITH WASHER	2					
9	90183–05807	TUERCA DE RESORTE NUT, SPRING	2					
10	90387–07819	ESPACIADOR COLLAR	2					
11	97022–06016	PERNO BOLT, HEXAGON	2					

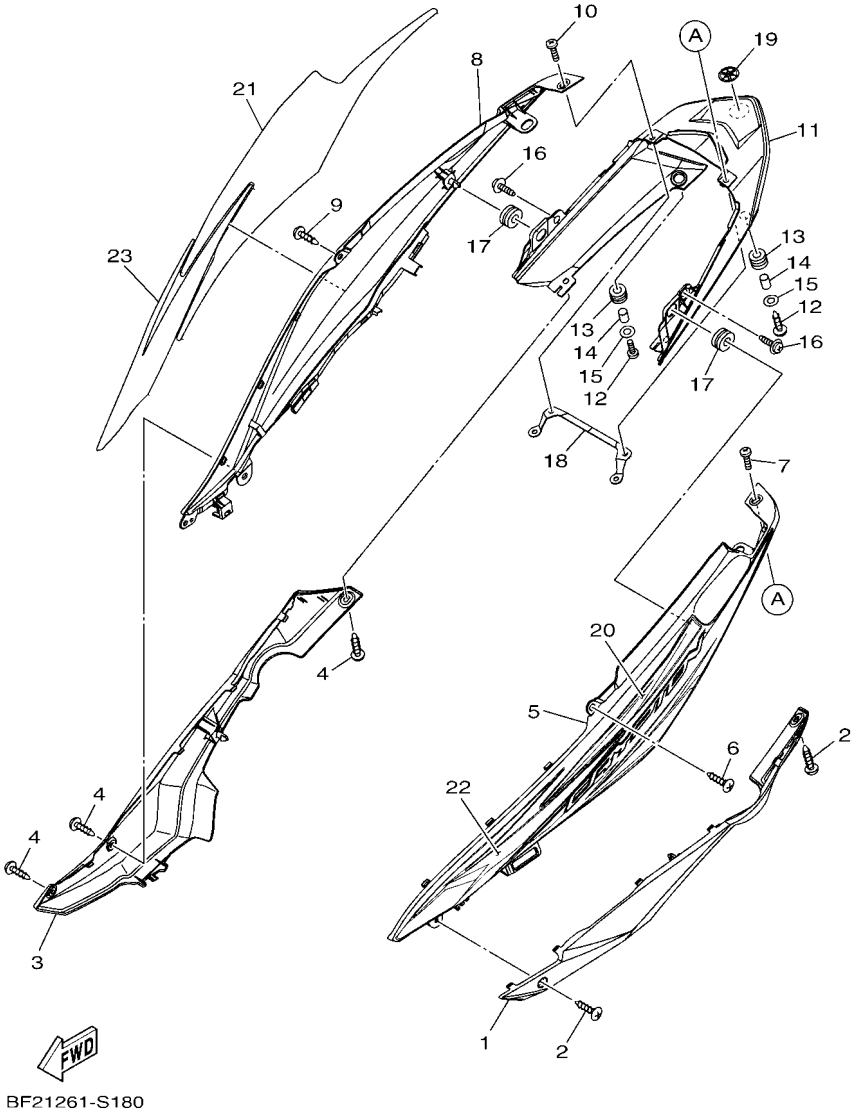

FIG. 18 CUBIERTA LATERAL — SIDE COVER

REF. Nº	CODIGO Nº PART NO.	DESCRIPCION DESCRIPTION	BF24					OBSERVACIONES REMARKS
1	1FD–F1711–00	CUBIERTA LATERAL 1 COVER, SIDE 1	1					
2	97702–50016	TORNILLO ROSCA HEMBRA SCREW, TAPPING	2					
3	1FD–F1721–00	CUBIERTA LATERAL 2 COVER, SIDE 2	1					
4	97702–50016	TORNILLO ROSCA HEMBRA SCREW, TAPPING	3					
5	BF2–F1731–00–P0	TAPA LATERAL 3 COVER, SIDE 3	1					SMX SMX
6	97702–50016	TORNILLO ROSCA HEMBRA SCREW, TAPPING	1					
7	90159–06810	TORNILLO CON VALONA SCREW, WITH WASHER	1					
8	BF2–F1741–00–P0	TAPA LATERAL 4 COVER, SIDE 4	1					SMX SMX
9	97702–50016	TORNILLO ROSCA HEMBRA SCREW, TAPPING	1					
10	90159–06810	TORNILLO CON VALONA SCREW, WITH WASHER	1					
11	1FD–F171E–00	CUBIERTA LATERAL 5 COVER, SIDE 5	1					
12	97702–50020	TORNILLO ROSCA HEMBRA SCREW, TAPPING	2					
13	90480–12808	TAPON GROMMET	2					
14	90387–068L6	ESPACIADOR COLLAR	2					
15	90201–08085	ARANDELA PLANA WASHER, PLATE	2					
16	90159–06810	TORNILLO CON VALONA SCREW, WITH WASHER	2					
17	90480–01813	TAPON GROMMET	2					
18	1FD–F172E–00	SOPORTE,CUBIERTA LATERAL 1 STAY, SIDE COVER 1	1					
19	BF2–F1737–00	EMBLEMA EMBLEM	1					
20	BF2–F173E–A0	GRAFICO, 1 GRAPHIC 1	1					UR PARA WM6 UR FOR WM6
	BF2–F173E–B0	GRAFICO, 1 GRAPHIC 1	1					UR PARA SMX(RED) UR FOR SMX(RED)
	BF2–F173E–C0	GRAFICO, 1 GRAPHIC 1	1					UR PARA SMX(BLUE) UR FOR SMX(BLUE)
	BF2–F173E–D0	GRAFICO, 1 GRAPHIC 1	1					UR PARA RM7 UR FOR RM7
21	BF2–F173F–A0	GRAFICO 2 GRAPHIC 2	1					UR PARA WM6 UR FOR WM6
	BF2–F173F–B0	GRAFICO 2 GRAPHIC 2	1					UR PARA SMX(RED) UR FOR SMX(RED)
	BF2–F173F–C0	GRAFICO 2 GRAPHIC 2	1					UR PARA SMX(BLUE) UR FOR SMX(BLUE)
	BF2–F173F–D0	GRAFICO 2 GRAPHIC 2	1					UR PARA RM7 UR FOR RM7

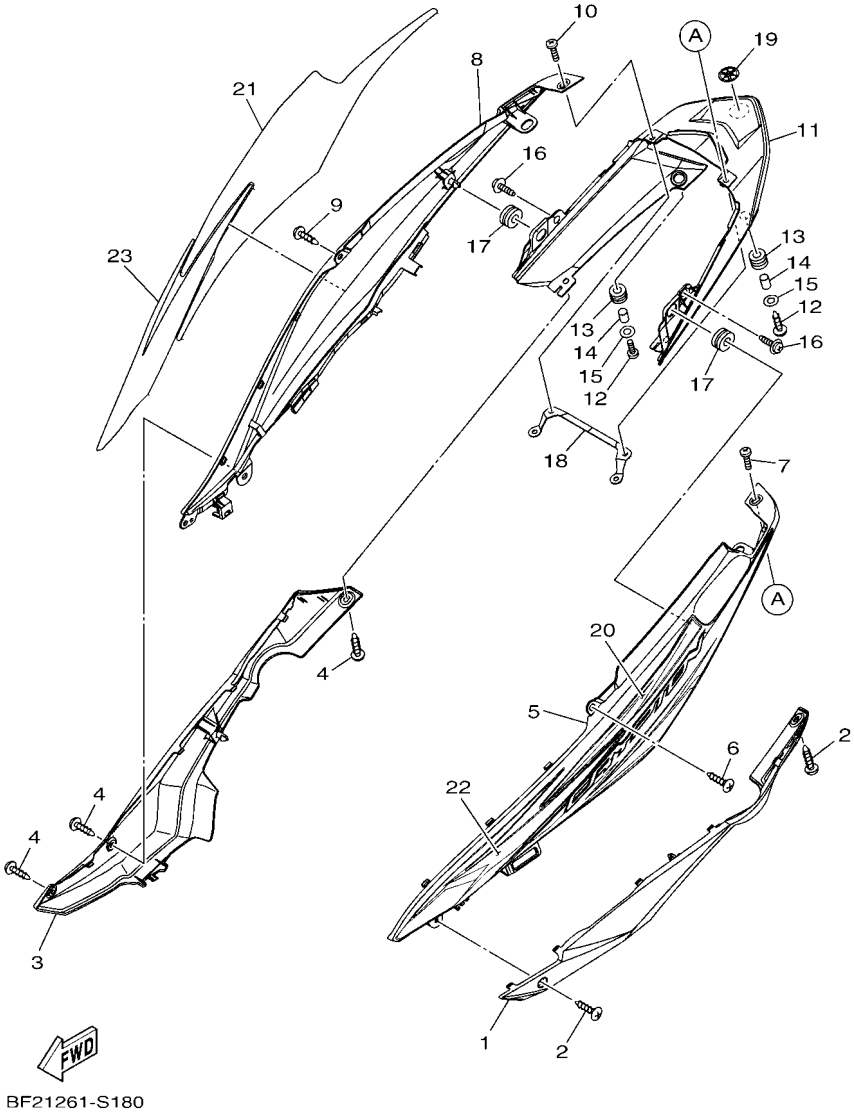

FIG. 18 CUBIERTA LATERAL — SIDE COVER

REF. Nº	CODIGO Nº PART NO.	DESCRIPCION DESCRIPTION	BF24					OBSERVACIONES REMARKS
22	BF2–F174G–A0	GRAFICO 3 GRAPHIC 3	1					UR PARA WM6 UR FOR WM6
	BF2–F174G–B0	GRAFICO 3 GRAPHIC 3	1					UR PARA SMX(RED) UR FOR SMX(RED)
	BF2–F174G–C0	GRAFICO 3 GRAPHIC 3	1					UR PARA SMX(BLUE) UR FOR SMX(BLUE)
	BF2–F174G–D0	GRAFICO 3 GRAPHIC 3	1					UR PARA RM7 UR FOR RM7
23	BF2–F174H–A0	GRAFICO 4 GRAPHIC 4	1					UR PARA WM6 UR FOR WM6
	BF2–F174H–B0	GRAFICO 4 GRAPHIC 4	1					UR PARA SMX(RED) UR FOR SMX(RED)
	BF2–F174H–C0	GRAFICO 4 GRAPHIC 4	1					UR PARA SMX(BLUE) UR FOR SMX(BLUE)
	BF2–F174H–D0	GRAFICO 4 GRAPHIC 4	1					UR PARA RM7 UR FOR RM7

FIG. 19 BRAZO TRASERO & SUSPENSION — REAR ARM & SUSPENSION

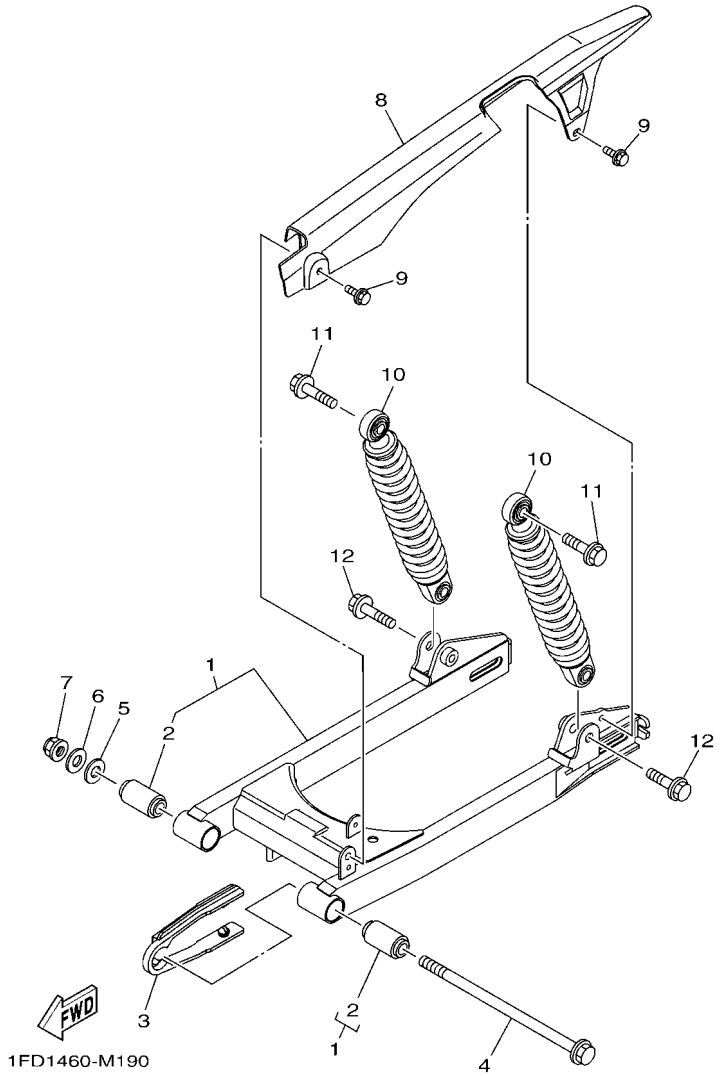

REF. Nº	CODIGO Nº PART NO.	DESCRIPCION DESCRIPTION	BF24					OBSERVACIONES REMARKS
1	BF2–F2100–10–33	BRAZO TRASERO COMPLETO REAR ARM ASSY	1					YB YB
2	3HB–F2123–00	.BUJE 1 .BUSH 1	2					
3	1FD–F2151–00	SELLO DE GUARDA SEAL, GUARD	1					
4	1FD–F2141–10	EJE DEL BARCULANTE SHAFT, PIVOT	1					
5	90201–12834	ARANDELA PLANA WASHER, PLATE	1					
6	90201–12028	ARANDELA PLANA WASHER, PLATE	1					
7	95602–12200	TUERCA DE AUTO-CIERRE NUT, SELF-LOCKING	1					
8	1FD–F2311–00	CABRECADENA CASE, CHAIN	1					
9	90119–06117	TORNILLO CON ARANDELA BOLT, WITH WASHER	2					
10	1FD–F2210–10	AMORTIGUADOR TRASERO COMPLETO SHOCK ABSORBER ASSY, REAR	2					
11	90105–10879	TORNILLO BOLT, FLANGE	2					
12	90105–10882	TORNILLO BOLT, FLANGE	2					

FIG. 20 DIRECCION — STEERING

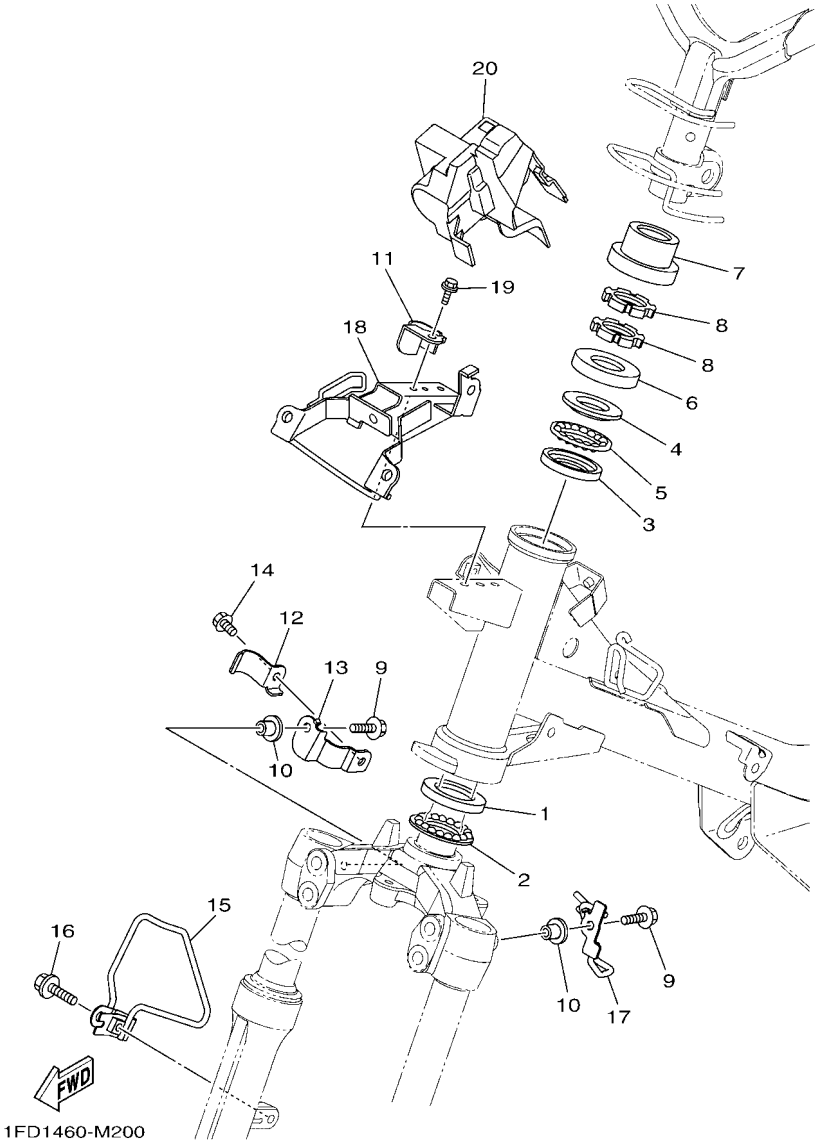

REF. Nº	CODIGO Nº PART NO.	DESCRIPCION DESCRIPTION	BF24					OBSERVACIONES REMARKS
1	50P–F3412–10	PISTA DE BOLAS 2 RACE, BALL 2	1					
2	50P–F341E–10	RETEN DE COJINETE RETAINER, BALL BEARING	1					
3	50P–F3412–00	PISTA DE BOLAS 2 RACE, BALL 2	1					
4	50P–F3411–00	PISTA DE BOLAS 1 RACE, BALL 1	1					
5	50P–F341E–00	RETEN DE COJINETE RETAINER, BALL BEARING	1					
6	3AY–F3416–00	CUBIERTA DE BASE DE BOLA 2 COVER, BALL RACE 2	1					
7	5LM–F3415–00	CUBIERTA DE PISTA DE BOLAS 1 COVER, BALL RACE 1	1					
8	90179–25033	TUERCA NUT	2					
9	95E32–06016	CERROJO, REBORDE HUECO PROFUND BOLT, FLANGE DEEP RECESS	2					
10	90387–06857	ESPACIADOR COLLAR	2					
11	1FD–F3874–00	SOPORTE DE CABLE HOLDER, WIRE	1					
12	1FD–F5886–00	SOPORTE DE MANGUERA FRENO HOLDER, BRAKE HOSE	1					
13	1FD–F5875–00	SOPORTE DE MANGUERA FRENO 1 HOLDER, BRAKE HOSE 1	1					
14	95E32–06010	CERROJO, REBORDE HUECO PROFUND BOLT, FLANGE DEEP RECESS	1					
15	1FD–F331E–00	GUIA DE CABLE GUIDE, CABLE	1					
16	95E32–06020	CERROJO, REBORDE HUECO PROFUND BOLT, FLANGE DEEP RECESS	1					
17	1FD–F3317–00	SOSTEN DE CABLE HOLDER, CABLE	1					
18	1FD–F331A–00	APOYO STAY	1					
19	95D02–06012	CERROJO, REBORDE HUECO PROFUND BOLT, FLANGE DEEP RECESS	2					
20	1FD–F3472–00	PROTECTOR PROTECTOR	1					

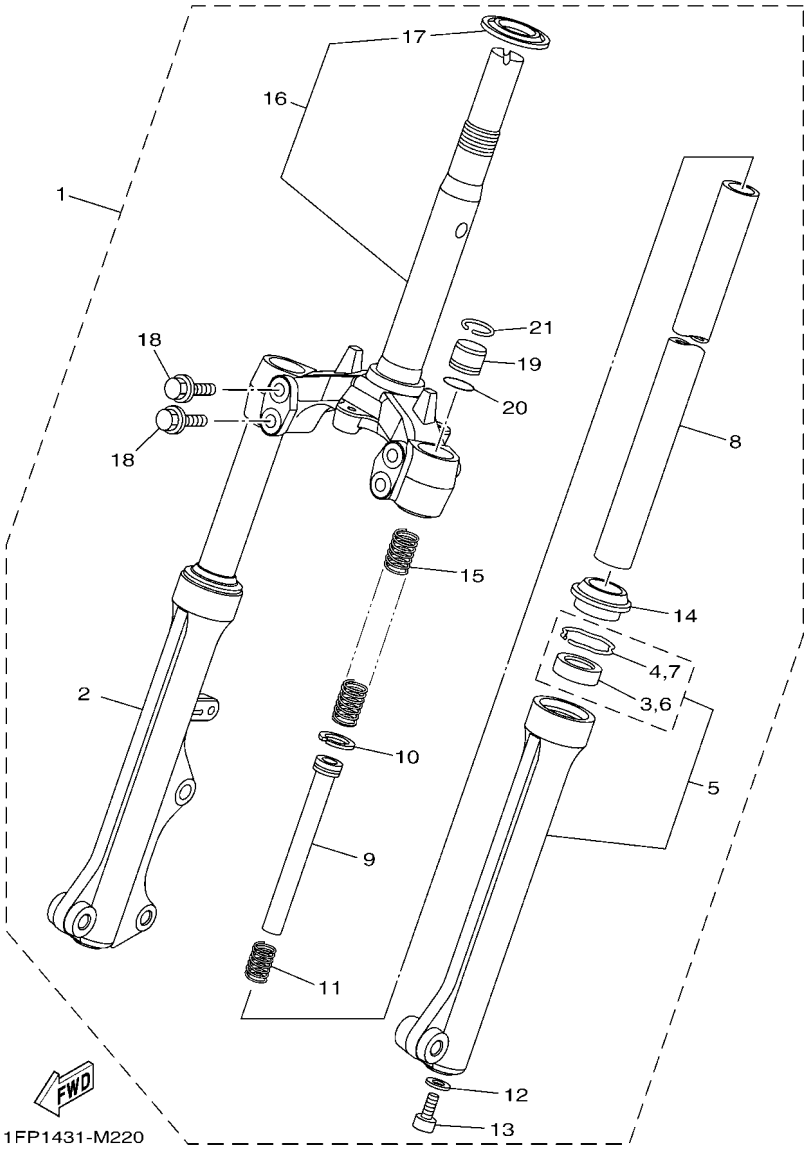

FIG. 21 HORQUILLA DELANTERA — FRONT FORK

REF. Nº	CODIGO Nº PART NO.	DESCRIPCION DESCRIPTION	BF24					OBSERVACIONES REMARKS
1	1FD–F3100–10	HORQUILLA DELANTERA COMPLETA FRONT FORK ASSY	1					
2	1FD–F3136–10	.TUBO EXTERIOR 2 .TUBE, OUTER 2	1					
3	3AY–F3145–00	..RETEN DE ACEITE ..OIL SEAL	1					
4	5P0–F3156–00	..ANILLO DE ENGANCHE ..RING, SNAP	1					
5	1FD–F3126–10	.TUBO EXTERIOR (IZQUIERDO) .TUBE, OUTER (L.H)	1					
6	3AY–F3145–00	..RETEN DE ACEITE ..OIL SEAL	1					
7	5P0–F3156–00	..ANILLO DE ENGANCHE ..RING, SNAP	1					
8	1FD–F3110–10	.TUBO INTERIOR COMPLETO 1 .INNER TUBE COMP.1	2					
9	5D9–F3170–00	.CILINDRO COMPL DE HORQ DELANT .CYLINDER COMP., FRONT FORK	2					
10	2JG–F3157–00	.ANILLO DEL PISTON .RING, PISTON	2					
11	5D9–F3152–00	.RESORTE DE SUBENSAMBLE .SPRING, SUB	2					
12	2BU–F3158–00	.EMPAQUE .GASKET	2					
13	278–F3181–50	.TORNILLO CABEZAHEXAGONAL .BOLT, HEXAGON SOCKET HEAD	2					
14	5LM–F3144–00	.GUARDAPOLVO .SEAL, DUST	2					
15	1FC–F3141–10	.RESORTE HORQUILLA DELANT. .SPRING, FRONT FORK	2					
16	1FD–F3340–10	.PLATINA INFERIOR COMPLETA .UNDER BRACKET COMP.	1					
17	4FP–F3411–10	..PISTA DE BOLAS 1 ..RACE, BALL 1	1					
18	31B–F3346–00	.PERNO 1 .BOLT 1	4					
19	1FC–F3111–10	.PERNO DE TAPA .BOLT, CAP	2					
20	2JG–F3147–00	.ARO .O-RING	2					
21	5P0–F3153–00	.ANILLO DE ENGANCHE .RING, SNAP	2					

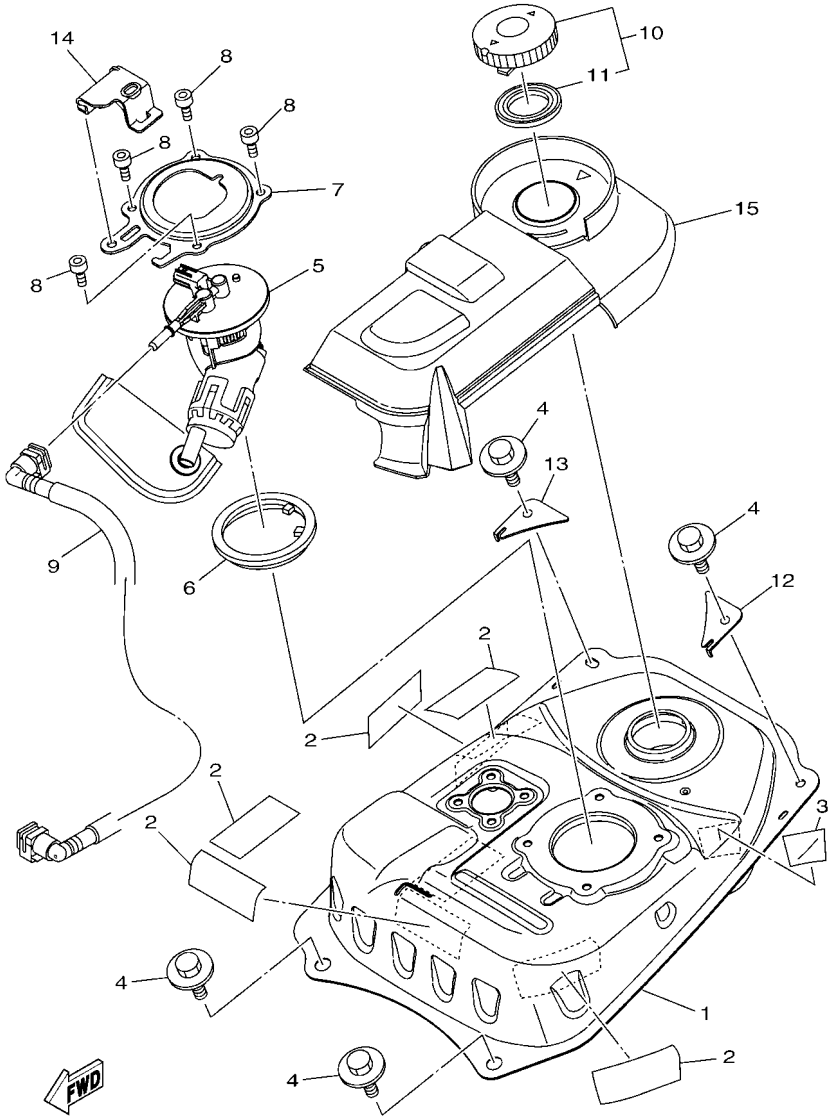

FIG. 22 DEPOSITO DE COMBUSTIBLE — FUEL TANK

REF. Nº	CODIGO Nº PART NO.	DESCRIPCION DESCRIPTION	BF24					OBSERVACIONES REMARKS
1	BF2–F4110–00	DEPOSITO DE COMBUSTIBLE COMP. FUEL TANK COMP.	1					
2	5D9–F414G–00	SELLO SEAL	5					
3	5D9–F414G–10	SELLO SEAL	1					
4	90119–06885	TORNILLO CON ARANDELA BOLT, WITH WASHER	4					
5	1DY–E3907–30	BOMBA DE COMBUSTIBLE COMPLETA FUEL PUMP COMP.	1					
6	54P–F414G–10	SELLO SEAL	1					
7	1DY–F4491–00	SOPORTE BOMBA COMBUSTIBLE BRACKET, FUEL PUMP	1					
8	91332–05010	PERNO BOLT	4					
9	1FD–E3971–11	ANILLO DE ESPACIADOR PIPE, FUEL 1	1					
10	1DY–F4610–00	TAPA COMPLETA CAP ASSY	1					
11	4YY–F4612–00	.EMPAQUE DE TAPA .PACKING, CAP	1					
12	1FP–F4186–00	ARANDELA ESPECIAL WASHER, SPECIAL	1					
13	1FP–F4187–00	ARANDELA ESPECIAL WASHER, SPECIAL	1					
14	1DY–E3993–00	CUBIERTA DE CAJA DE CONTROL COVER, CONTROL RACK	1					
15	1FD–F41B1–00	TAPA DE TANQUE COVER, TANK	1					

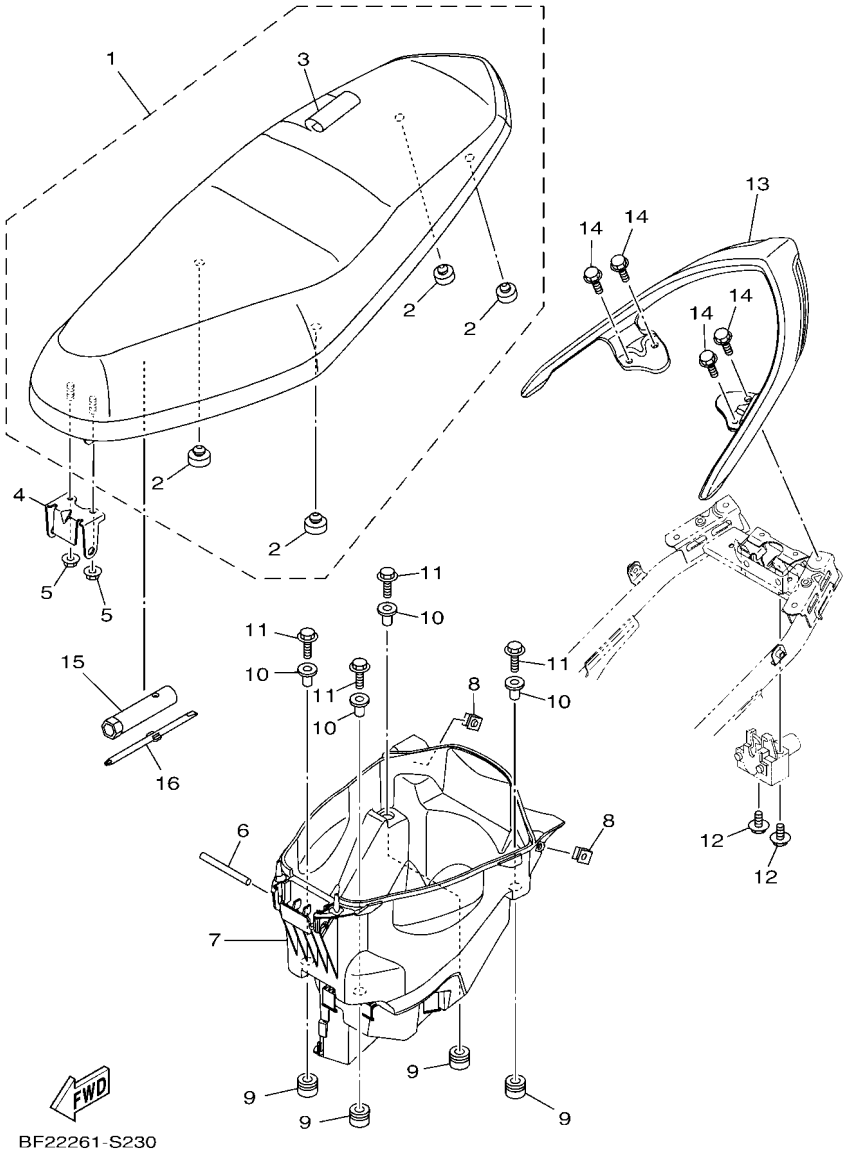

FIG. 23 ASIENTO — SEAT

REF. Nº	CODIGO Nº PART NO.	DESCRIPCION DESCRIPTION	BF24					OBSERVACIONES REMARKS
1	BF2–F4730–00	SILLIN DOBLE COMPLETO DOUBLE SEAT ASSY	1					
2	1BN–F4741–10	.COJIN DE ASIENTO .PAD, SEAT	4					
3	BF2–F470F–00	.FUNDADE SILLIN .SEAT COVER COMP.	1					
4	1FD–F4726–01	BISAGRA DE ASIENTO HINGE, SEAT	1					
5	95702–06500	TUERCA DE BRIDA NUT, FLANGE	2					
6	1FD–F4727–00	PASADOR ACCESORIO DE ASIENTO PIN, SEAT FITTING	1					
7	1FD–F473R–00	CAJA 1 BOX 1	1					
8	90183–05807	TUERCA DE RESORTE NUT, SPRING	2					
9	90480–14806	TAPON GROMMET	4					
10	90387–068D7	ESPACIADOR COLLAR	4					
11	95E32–06025	CERROJO, REBORDE HUECO PROFUND BOLT, FLANGE DEEP RECESS	4					
12	95D02–06035	CERROJO, REBORDE HUECO PROFUND BOLT, FLANGE DEEP RECESS	2					
13	BF2–F4773–00–P0	MANIJA DE ASIENTO HANDLE, SEAT	1					SMX SMX
14	95D32–06016	CERROJO, REBORDE HUECO PROFUND BOLT, FLANGE DEEP RECESS	4					
15	2DP–F814F–00	CAJA BOX, SPARK PLUG	1					
16	3AY–F8152–00	CONDUCTOR DRIVER	1					

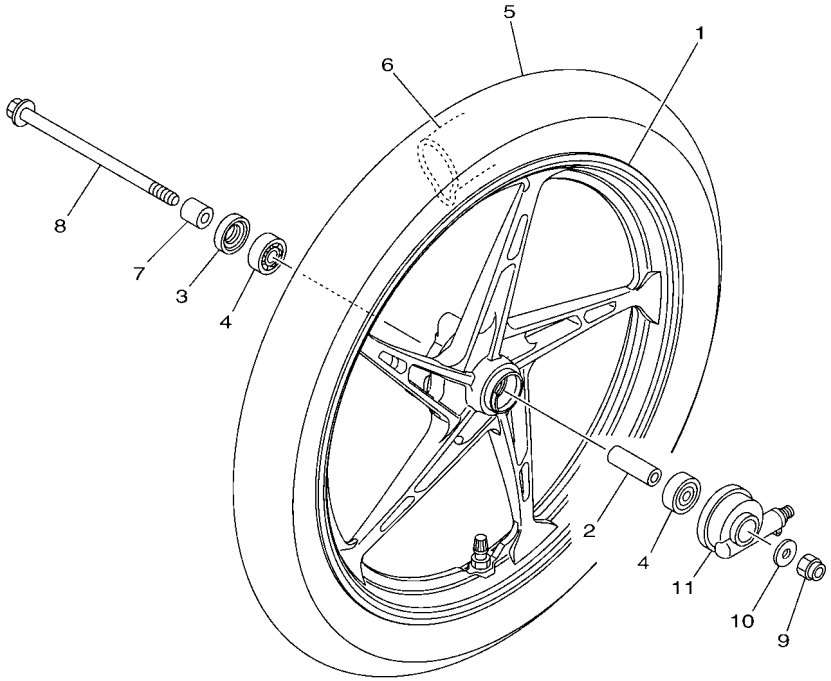

1FD6460-P240

FIG. 24 RUEDA DELANTERA — FRONT WHEEL

REF. Nº	CODIGO Nº PART NO.	DESCRIPCION DESCRIPTION	BF24					OBSERVACIONES REMARKS
1	BF2–F5168–00–33	RUEDA FUNDIDA DELANTERA CAST WHEEL, FRONT	1					UR YB UR YB
	1FD–F5168–00–33	RUEDA FUNDIDA DELANTERA CAST WHEEL, FRONT	1					UR YB UR YB
2	90560–10292	SEPARADOR SPACER	1					
3	93106–20816	SELLO ACEITE OIL SEAL	1					
4	93306–300X9	COJINETE BEARING	2					
5	94107–17868	NEUMATICO (70/90-17 M/C 38L) TIRE (70/90-17 M/C 38L D102FA)	1					UR DUNLOP UR DUNLOP
	94107–17849	NEUMATICO TIRE (70/90-17 MC 38P)	1					UR MAXXIS UR MAXXIS
6	94222–17800	TUBO (2.25/2.50-17 TR4) TUBE (2.25/2.50-17 TR4)	1					UR DUNLOP UR DUNLOP
	94207–17810	TUBO (70/90-17) TUBE (70/90-17)	1					UR MAXXIS UR MAXXIS
7	90387–10277	ESPACIADOR COLLAR	1					
8	3AY–F5181–01	EJE DE LA RUEDA AXLE, WHEEL	1					
9	90185–10012	TUERCA AUTOBLOCANTE NUT, SELF-LOCKING	1					
10	90201–10035	ARANDELA PLANA WASHER, PLATE	1					
11	5TP–F5190–01	UNIDAD DE ENGRANAJE COMPLETA GEAR UNIT ASSY	1					

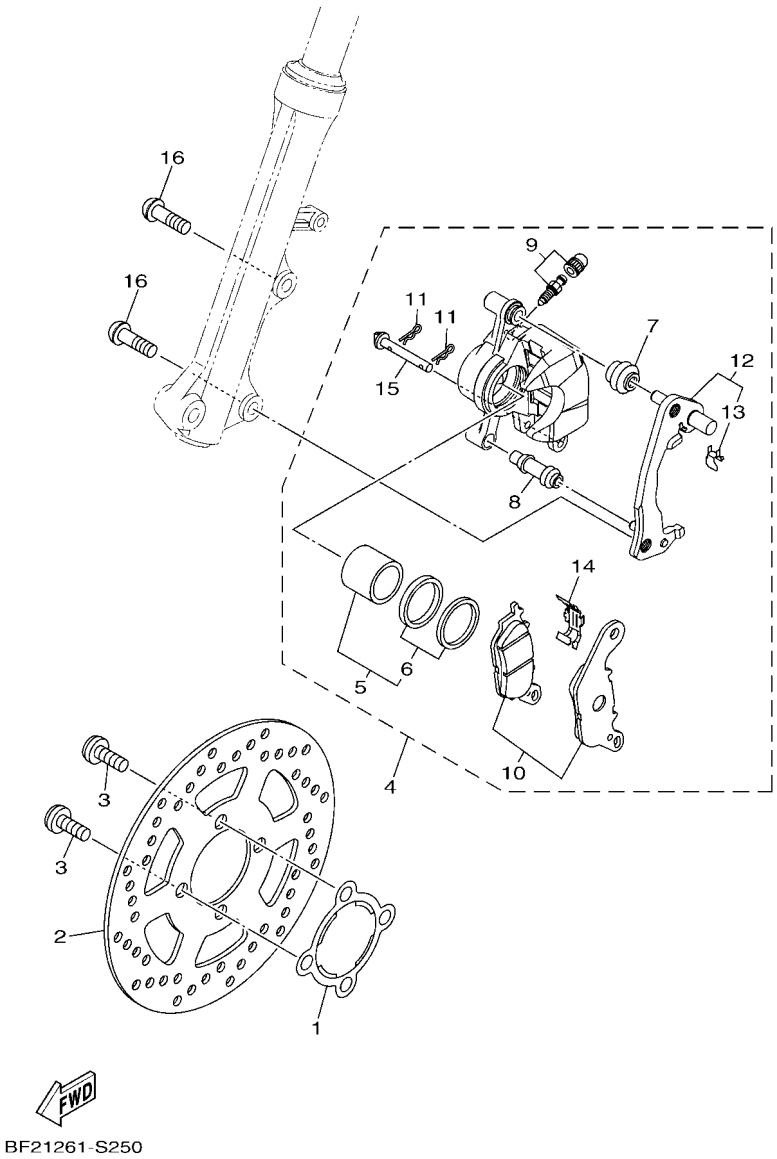

FIG. 25 CALIBRE FRENO DELANTERA — FRONT BRAKE CALIPER

REF. Nº	CODIGO Nº PART NO.	DESCRIPCION DESCRIPTION	BF24					OBSERVACIONES REMARKS
1	1DY–F518A–10	PLACA ACCESORIA PLATE, FITTING	1					
2	1FD–F582U–00	DISCO DE FRENO (DERECHO) DISK, BRAKE (RIGHT)	1					
3	90111–08815	TORNILLO BOLT,HEX. SOCKET BUTTON	4					
4	1FD–F580U–01	CALIBRE COMPLETO (DERECHO) CALIPER ASSY (RIGHT)	1					
5	2BM–F5802–00	.PISTON COMPLETO PINZA .PISTON ASSY, CALIPER	1					
6	5YP–F5803–50	..JUEGO DE RETENES DE PINZA ..CALIPER SEAL KIT	1					
7	2BM–F5917–00	.FUNDA DE CALIBRE .BOOT, CALIPER	1					
8	5YP–F5937–00	.FUNDA .BOOT 2	1					
9	4C9–W0048–00	.CJTO TORNILLO DE PURGA .BLEED SCREW KIT	1					
10	2BM–F5805–00	.JUEGO DE COJIN DE FRENO .BRAKE PAD KIT	1					
11	5YP–F5925–01	.PRESILLA .CLIP	2					
12	2BM–F5920–00	.SOPORTE .SUPPORT BRACKET ASSY	1					
13	2BM–F5939–00	..PRESILLA ..PAD, SUPPORT 2	1					
14	2BM–F5919–00	.SOPORTE DE PASTILLAS .SUPPORT, PAD	1					
15	5YP–F5924–00	.PASADOR .PIN, PAD	1					
16	90149–10805	TORNILLO DE REGLAJE SCREW	2					

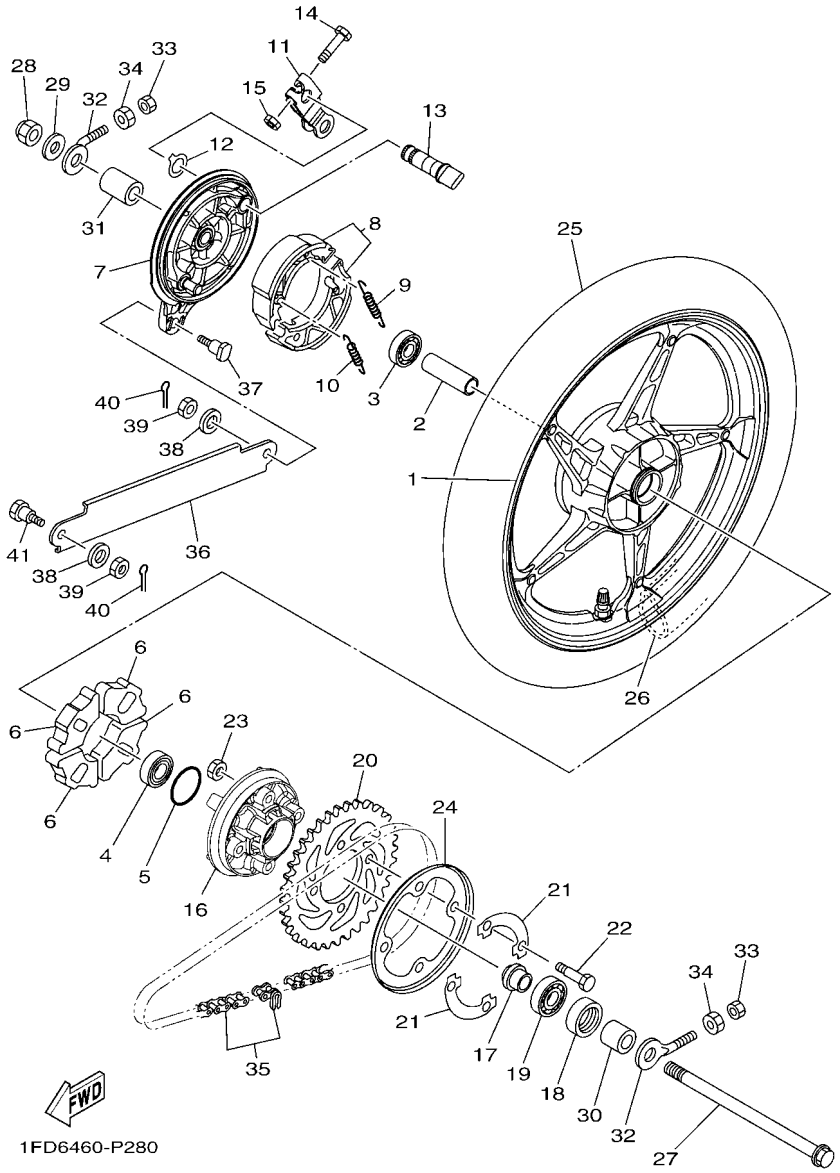

FIG. 26 RUEDA TRASERA — REAR WHEEL

REF. Nº	CODIGO Nº PART NO.	DESCRIPCION DESCRIPTION	BF24					OBSERVACIONES REMARKS
1	BF2–F5338–00–33	RUEDA FUNDIDA TRASERA CAST WHEEL, REAR	1					UR YB UR YB
	1FD–F5338–00–33	RUEDA FUNDIDA TRASERA CAST WHEEL, REAR	1					UR YB UR YB
2	90387–12860	ESPACIADOR COLLAR	1					
3	93306–351Y3	COJINETE BEARING	1					
4	93306–351Y2	COJINETE BEARING	1					
5	93210–418G7	ANILLO O O-RING	1					
6	1DY–F5364–00	AMORTIGUADOR DAMPER	4					
7	1S7–F5321–00–33	PLACA DE ZAPATA DE FRENO PLATE, BRAKE SHOE	1					YB YB
8	1LB–F530K–00	JUEGO DE ZAPATA DE FRENO BRAKE SHOE SET	1					
9	90506–12001	RESORTE DE TENSION SPRING, TENSION	1					
10	90506–15001	RESORTE DE TENSION SPRING, TENSION	1					
11	2P2–F5355–00	PALANCA DE ARBOL DE LEVAS LEVER, CAMSHAFT	1					
12	5D9–F533A–00	PLACA INDICADOR PLATE, INDICATOR	1					
13	3Y6–F5351–00	ARBOL DE LEVAS CAMSHAFT	1					
14	90101–06046	TORNILLO BOLT	1					
15	95302–06600	TUERCA NUT, HEXAGON	1					
16	5D9–F5366–00	EMBRAGUE DE MASA CLUTCH, HUB	1					
17	90387–127Y0	ESPACIADOR COLLAR	1					
18	93106–26815	SELLO ACEITE OIL SEAL	1					
19	93306–054YK	COJINETE BEARING	1					
20	5D9–F5441–00	CORONA (41T) SPROCKET, DRIVEN (41T)	1					
21	1FD–F5412–00	ARANDELA WASHER	2					
22	90101–08847	TORNILLO BOLT	4					
23	90179–08826	TUERCA NUT	4					
24	1FD–F5414–00	ESPACIADOR SPACER	1					
25	94108–17864	NEUMATICO (80/90-17 M/C 44L) TIRE (80/90-17 M/C 44L D102A)	1					UR DUNLOP UR DUNLOP
	94108–17845	NEUMATICO TIRE (80/90-17 MC 50P)	1					UR MAXXIS UR MAXXIS

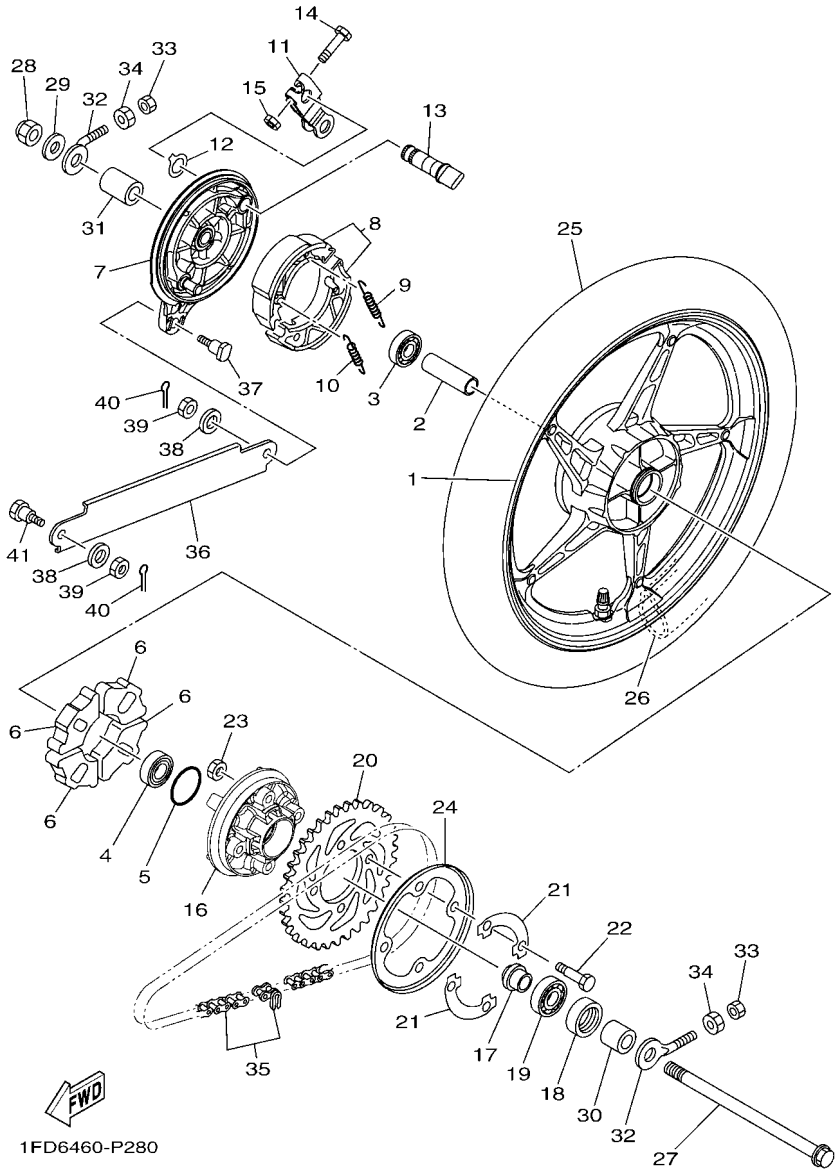

FIG. 26 RUEDA TRASERA — REAR WHEEL

REF. Nº	CODIGO Nº PART NO.	DESCRIPCION DESCRIPTION	BF24					OBSERVACIONES REMARKS
26	94227–17805	TUBO (2.75-17 TR4) TUBE (2.75-17 TR4)	1					UR DUNLOP UR DUNLOP
	94208–17810	TUBO (80/90-17) TUBE (80/90-17)	1					UR MAXXIS UR MAXXIS
27	1FD–F5381–10	EJE DE RUEDA AXLE, WHEEL	1					
28	90185–12804	TUERCA AUTOBLOCANTE NUT, SELF-LOCKING	1					
29	90201–12823	ARANDELA PLANA WASHER, PLATE	1					
30	5D9–F5383–00	COLLAR DE RUEDA COLLAR, WHEEL	1					
31	1FD–F5377–00	COLLAR DE RUEDA COLLAR, WHEEL	1					
32	5LM–F5389–00	TIRADOR DE CADENA 2 PULLER, CHAIN 2	2					
33	95302–06600	TUERCA NUT, HEXAGON	2					
34	90170–06809	TUERCA NUT	2					
35	9X568–C4105	CADENA (RK 420SBZ1 - 106L) CHAIN (RK 420SBZ1 - 106L)	1					
36	BF2–F5371–00	BARRA TENSORA BAR, TENSION	1					
37	90109–08816	PERNO BOLT	1					
38	92902–08200	ARANDELA WASHER	2					
39	95302–08600	TUERCA NUT, HEXAGON	2					
40	91402–20012	CHAVETA PIN, COTTER	2					
41	90109–08849	PERNO BOLT	1					

FIG. 27 MANILLAR & CABLE — STEERING HANDLE & CABLE

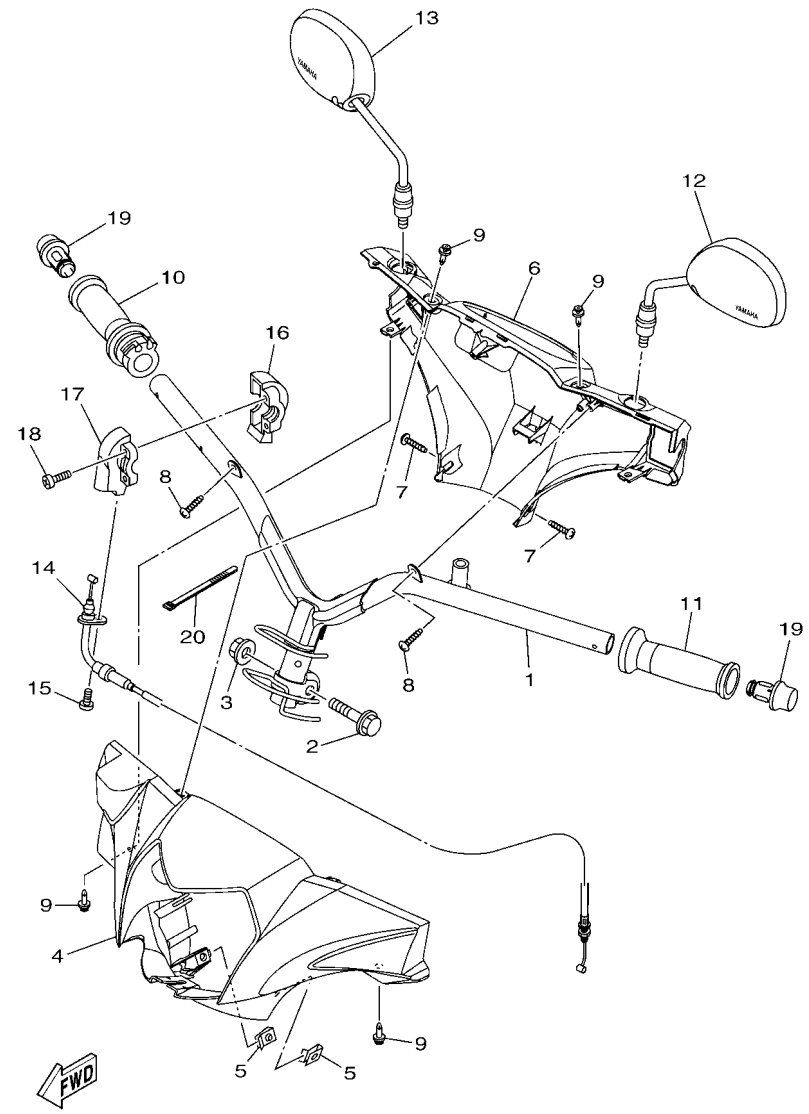

BF21261-S270

REF. Nº	CODIGO Nº PART NO.	DESCRIPCION DESCRIPTION	BF24					OBSERVACIONES REMARKS
1	1FD–F6110–00	MANUBRIO COMPLETE HANDLE COMP.	1					
2	90105–10896	TORNILLO BOLT, FLANGE	1					
3	90185–10011	TUERCA AUTOBLOCANTE NUT, SELF-LOCKING	1					
4	BF2–F6143–00–P0	CUBIERTA DE MANUBRIO SUPERIOR1 COVER, HANDLE UPPER 1	1					UR PARA WM6 UR FOR WM6
	BF2–F6143–00–P1	CUBIERTA DE MANUBRIO SUPERIOR1 COVER, HANDLE UPPER 1	1					UR PARA SMX UR FOR SMX
	BF2–F6143–00–P2	CUBIERTA DE MANUBRIO SUPERIOR1 COVER, HANDLE UPPER 1	1					UR PARA RM7 UR FOR RM7
5	90183–05807	TUERCA DE RESORTE NUT, SPRING	2					
6	1FD–F6145–00	CUBIERTA DE MANUBRIO SUPERIOR2 COVER, HANDLE UPPER 2	1					
7	97702–50012	TORNILLO ROSCA HEMBRA SCREW, TAPPING	2					
8	97702–50016	TORNILLO ROSCA HEMBRA SCREW, TAPPING	2					
9	90269–06812	REMACHE RIVET	4					
10	44D–F6240–00	EMPUNADURA COMPLETA GRIP ASSY	1					
11	44D–F6241–00	EMPUNADURA GRIP	1					
12	1FD–F6280–00	ESPEJO COMPLETO (IZQUIERDO) REAR VIEW MIRROR ASSY (LEFT)	1					
13	1FD–F6290–00	ESPEJO COMPLETO (DERECHO) REAR VIEW MIRROR ASSY (RIGHT)	1					
14	1FD–F6301–10	CABLE DE ACELERADOR COMPLETO THROTTLE CABLE ASSY	1					
15	92012–05016	PERNO BOLT, BUTTON HEAD	1					
16	1FD–F6281–10	TAPA DE EMPUNADURA SUPERIOR CAP, GRIP UPPER	1					
17	1FD–F6282–10	TAPA, EMPUNADURA INFERIOR CAP, GRIP UNDER	1					
18	98502–05025	TORNILLO SCREW, PAN HEAD	2					
19	54P–F6246–00	EXTREMO DE EMPUNADURA END, GRIP	2					
20	90464–36800	BRIDA CLAMP	1					

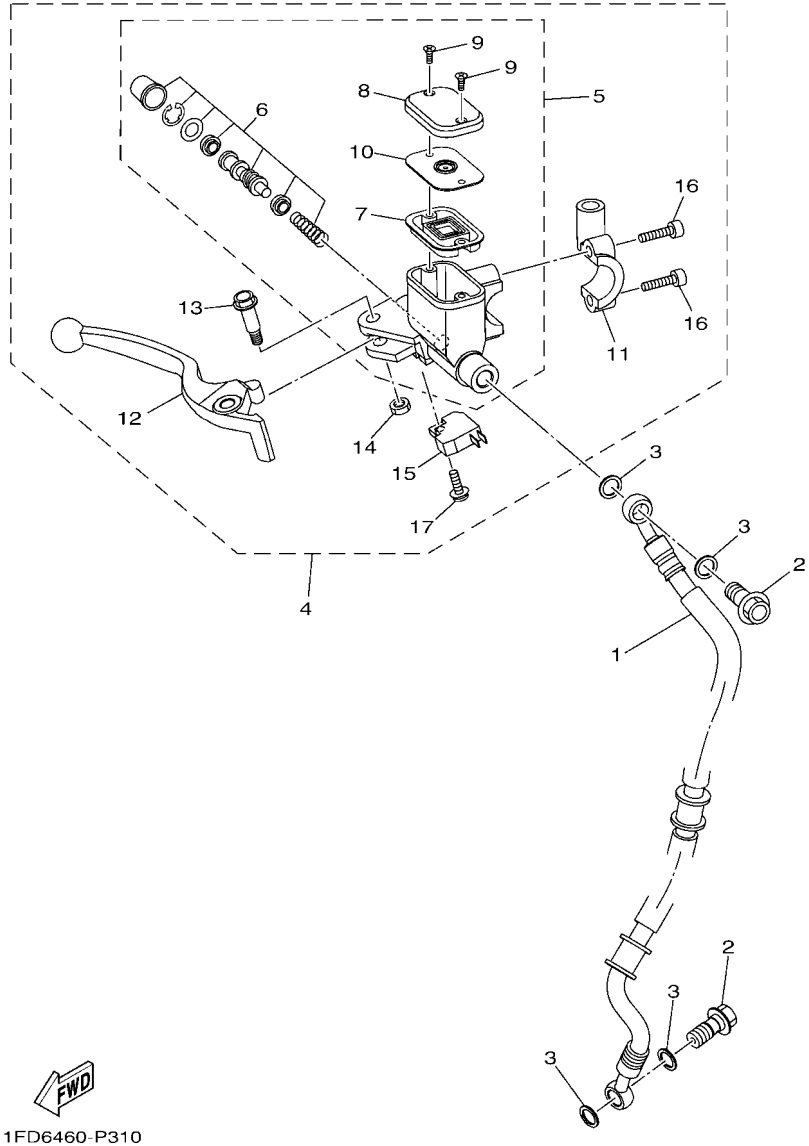

FIG. 28 CILINDRO MAESTRO DELANTERO — FRONT MASTER CYLINDER

REF. Nº	CODIGO Nº PART NO.	DESCRIPCION DESCRIPTION	BF24					OBSERVACIONES REMARKS
1	1FD–F5872–10	MANGUERA DE FRENO 1 HOSE, BRAKE 1	1					
2	90401–10812	PERNO DE UNION BOLT, UNION	2					
3	90201–10118	ARANDELA PLANA WASHER, PLATE	4					
4	1FD–F583T–00	CILINDRO MAESTRO COMPLETO MASTER CYLINDER ASSY	1					
5	1FD–F5870–00	.CILINDRO MAESTRO COMPLETO .MASTER CYLINDER SUB ASSY	1					
6	5P0–F580A–00	..JUEGO DE CILINDRO MAESTRO ..CYLINDER KIT, MASTER	1					
7	2ND–F5854–00	..EMPAQUE,DIAFRAGMA ..DIAPHRAGM, RESERVOIR	1					
8	1FD–F5852–00	..TAPA DE TANQUE DE RESERVA ..CAP, RESERVOIR	1					
9	36Y–2589H–00	..TORNILLO ..SCREW	2					
10	2ND–F5855–00	..BUJE DE DIAFRAGMA ..BUSH,DIAPHRAGM	1					
11	5TL–F5867–01	.SOPORTE DE CILINDRO MAESTRO .BRACKET, MASTER CYLINDER	1					
12	2PV–H3922–00	.PALANCA 2 .LEVER 2	1					
13	90109–06255	.PERNO .BOLT	1					
14	95602–06100	.TUERCA AUTOBLOCANTE .NUT, SELF-LOCKING	1					
15	2DP–H3980–00	.INTERRUP. DE PARADA DELANTERO .FRONT STOP SWITCH ASSY	1					
16	91312–06025	.TORNILLO ALLEN .BOLT, HEXAGON SOCKET HEAD	2					
17	97602–04312	.TORNILLO CON RONDONA .SCREW, PAN HEAD WITH WASHER	1					

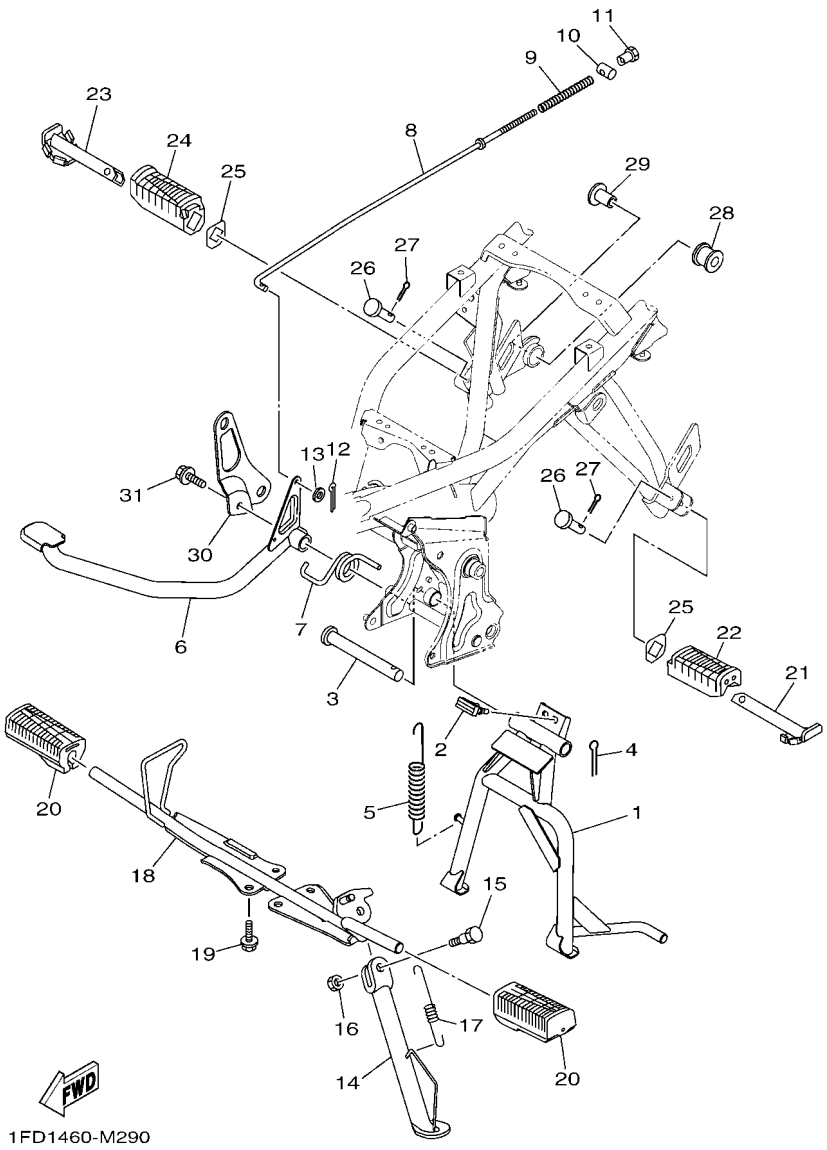

FIG. 29 SOPORTE & APOYAPIE — STAND & FOOTREST

REF. Nº	CODIGO Nº PART NO.	DESCRIPCION DESCRIPTION	BF24					OBSERVACIONES REMARKS
1	BF2–F7111–00	PUNTAL PRINCIPAL STAND, MAIN	1					
2	5D9–F7114–00	TOPE DE PUNTAL PRINCIPAL STOPPER, MAIN STAND	1					
3	1FD–F7112–00	EJE DE PUNTAL PRINCIPAL SHAFT, MAIN STAND	1					
4	91401–30030	CHAVETA PIN, COTTER	1					
5	90506–35806	RESORTE DE TENSION SPRING, TENSION	1					
6	BF2–F7211–00	PEDAL DE FRENO PEDAL, BRAKE	1					
7	1FD–F7426–00	RESORTE DE RETORNO SPRING, RETURN	1					
8	BF2–F7231–00	VARILLA DE FRENO ROD, BRAKE	1					
9	90501–10245	RESORTE DE COMPRESION SPRING, COMPRESSION	1					
10	90249–12008	PASADOR PIN	1					
11	90179–06835	TUERCA NUT	1					
12	91402–20012	CHAVETA PIN, COTTER	1					
13	92902–06600	ARANDELA WASHER, PLATE	1					
14	1FD–F7311–00	PUNTAL LATERAL STAND, SIDE	1					
15	90109–08850	PERNO BOLT	1					
16	95302–08700	TUERCA NUT, HEXAGON	1					
17	90506–23809	RESORTE DE TENSION SPRING, TENSION	1					
18	1FD–F7411–00	APOYAPIE 1 FOOTREST 1	1					
19	95D32–08016	CERROJO, REBORDE HUECO PROFUND BOLT, FLANGE DEEP RECESS	4					
20	1DY–F7413–00	CUBIERTA DE APOYAPIE COVER, FOOTREST	2					
21	1FD–F7431–00	APOYAPIE POSTERIOR 1 FOOTREST, REAR 1	1					
22	1FD–F7433–00	CUBIERTA APOYAPIE TRASERO COVER, REAR FOOTREST	1					
23	1FD–F7441–00	APOYAPIE POSTERIOR 2 FOOTREST, REAR 2	1					
24	1FD–F7444–00	CUBIERTA APOYAPIE TRASERO COVER, REAR FOOTREST	1					
25	1FD–F7445–00	PLACE 1 PLATE 1	2					
26	91702–06035	PASADOR DE ADRAZADERA PIN, CLEVIS	2					
27	91402–20012	CHAVETA PIN, COTTER	2					

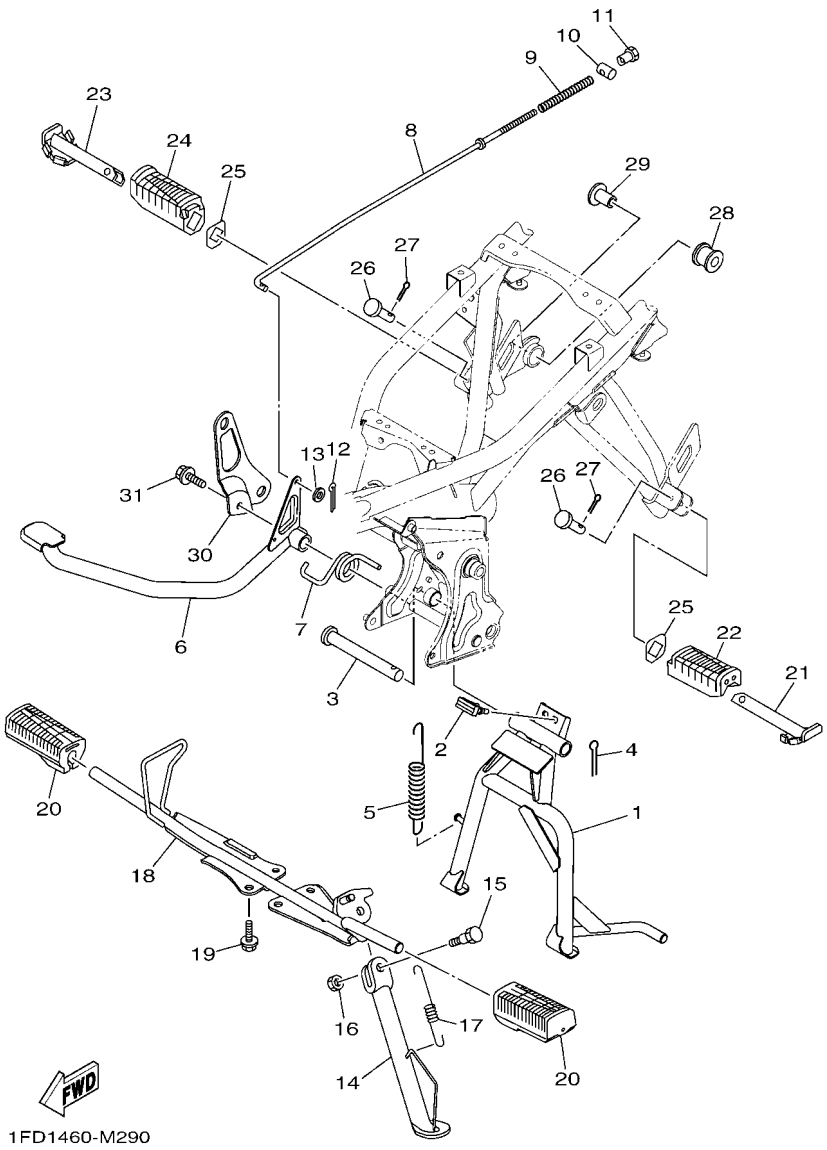

FIG. 29 SOPORTE & APOYAPIE — STAND & FOOTREST

REF. Nº	CODIGO Nº PART NO.	DESCRIPCION DESCRIPTION	BF24					OBSERVACIONES REMARKS
28	5TP–E4747–00	AMORTIGUADOR DE SILENCIADOR DAMPER, MUFFLER	1					
29	90387–08813	ESPACIADOR COLLAR	1					
30	1FD–F194J–00	SUPORTE DO SILENCIADOR STAY, MUFFLER	1					
31	95D32–08016	CERROJO, REBORDE HUECO PROFUND BOLT, FLANGE DEEP RECESS	1					

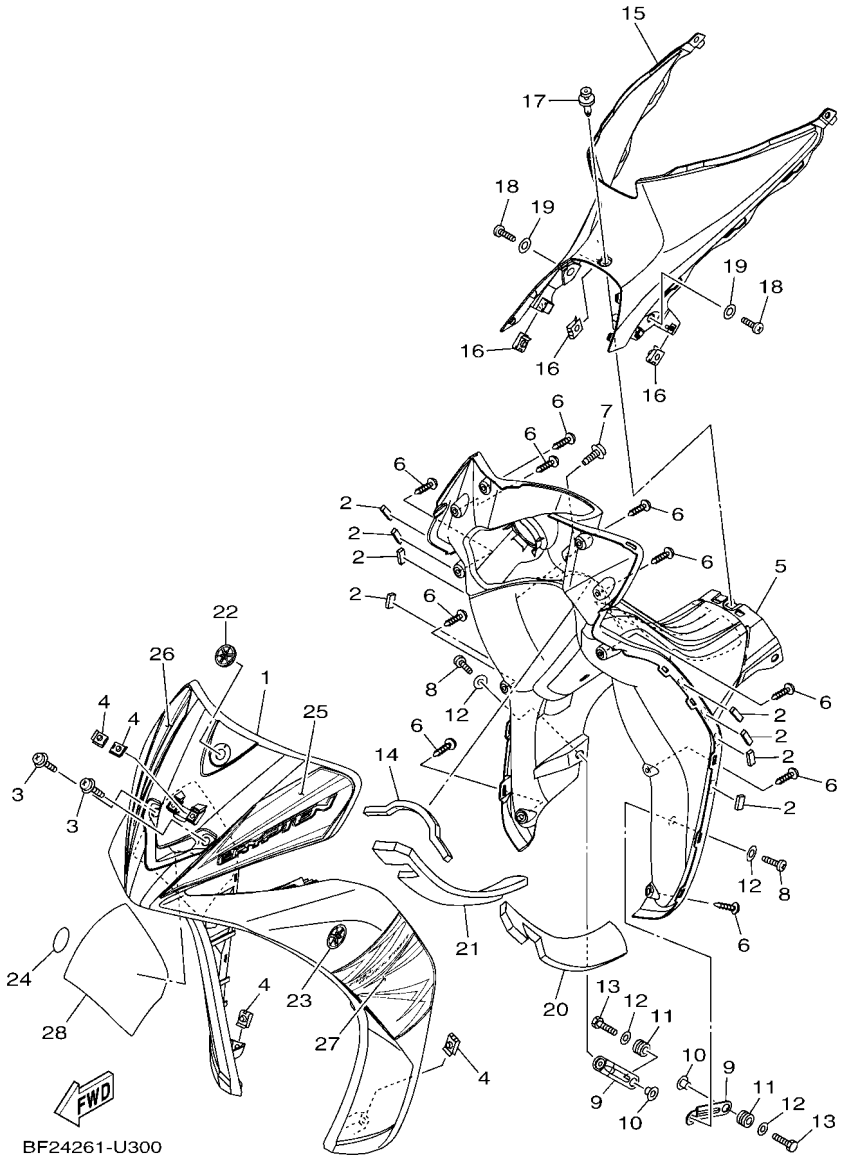

FIG. 30 PATA PROTEGIDA — LEG SHIELD

REF. Nº	CODIGO Nº PART NO.	DESCRIPCION DESCRIPTION	BF24					OBSERVACIONES REMARKS
1	BF2–F8311–00–P0	PROTECCION DE PATA 1 LEG SHIELD 1	1					UR PARA WM6 UR FOR WM6
	BF2–F8311–00–P1	PROTECCION DE PATA 1 LEG SHIELD 1	1					UR PARA SMX UR FOR SMX
	BF2–F8311–00–P2	PROTECCION DE PATA 1 LEG SHIELD 1	1					UR PARA RM7 UR FOR RM7
2	1FD–F8307–00	SELLO SEAL	8					
3	90159–06810	TORNILLO CON VALONA SCREW, WITH WASHER	2					
4	90183–05807	TUERCA DE RESORTE NUT, SPRING	4					
5	1FD–F8312–30	PROTECCION DE PATA 2 LEG SHIELD 2	1					
6	97702–50016	TORNILLO ROSCA HEMBRA SCREW, TAPPING	10					
7	90159–06810	TORNILLO CON VALONA SCREW, WITH WASHER	1					
8	98902–06020	TORNILLO DE LIGAR SCREW, BIND	2					
9	1FD–F8321–00	SOPORTE STAY 1	2					
10	90387–06814	ESPACIADOR COLLAR	2					
11	90480–13815	TAPON GROMMET	2					
12	90201–06827	ARANDELA PLANA WASHER, PLATE	4					
13	97002–06020	PERNO BOLT	2					
14	90520–15807	EQUILIBRIO, CUBIERTA DAMPER, PLATE	1					
15	1FD–F842N–00	CUBIERTA 2 COVER 2	1					
16	90183–05807	TUERCA DE RESORTE NUT, SPRING	3					
17	90269–06812	REMACHE RIVET	1					
18	98902–06020	TORNILLO DE LIGAR SCREW, BIND	2					
19	90201–06827	ARANDELA PLANA WASHER, PLATE	2					
20	1FD–F836T–00	AMORTIGUADOR DE MONTAJE 1 DAMPER, LOCATING 1	1					
21	1FD–F836U–00	AMORTIGUADOR DE UBICACION 2 DAMPER, LOCATING 2	1					
22	BF2–F313B–00	EMBLEMA 1 EMBLEM, 1	1					
23	BF2–F836D–00	MARCA TUNING FORK MARK	1					
24	BF2–F836D–00	MARCA TUNING FORK MARK	1					
25	BF2–F832L–A0	GRAFICO 13 GRAPHIC, 13	1					UR PARA WM6 UR FOR WM6

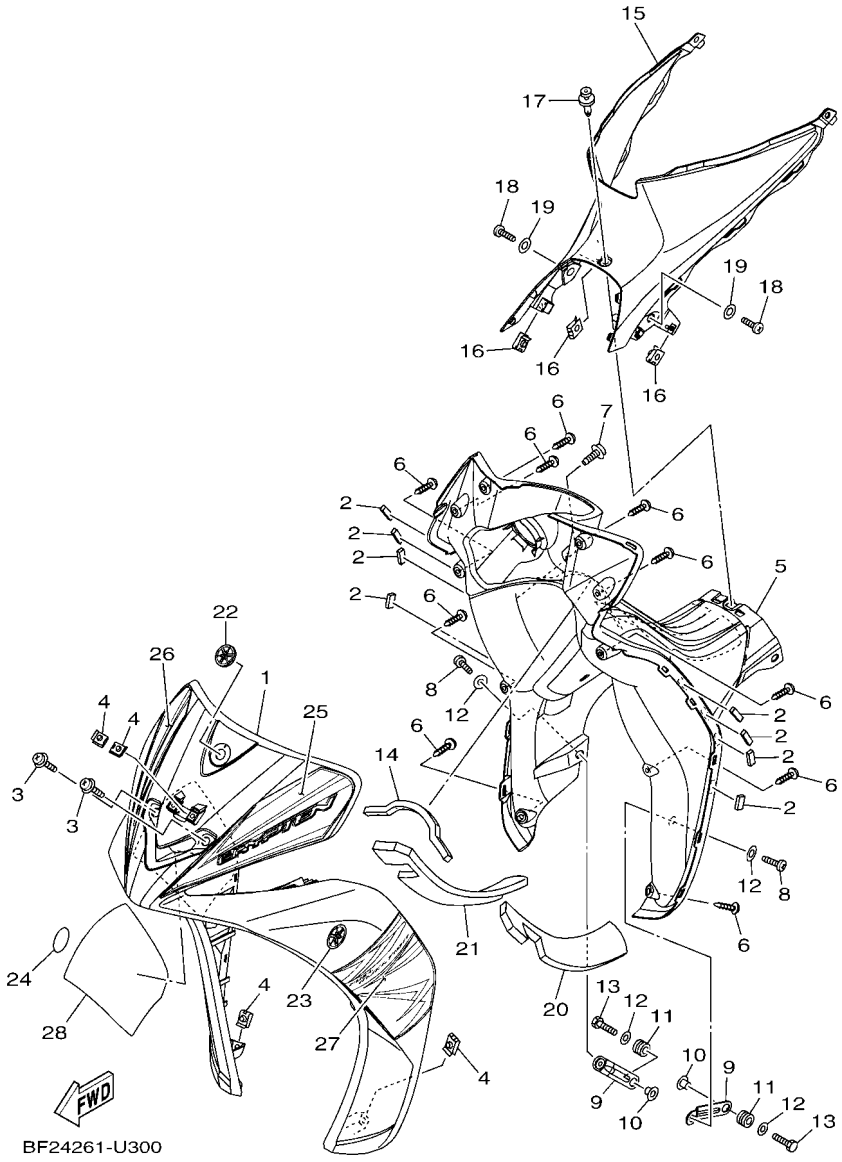

FIG. 30 PATA PROTEGIDA — LEG SHIELD

REF. Nº	CODIGO Nº PART NO.	DESCRIPCION DESCRIPTION	BF24					OBSERVACIONES REMARKS
25	BF2–F832L–B0	GRAFICO 13 GRAPHIC, 13	1					UR PARA SMX(RED) UR FOR SMX(RED)
	BF2–F832L–C0	GRAFICO 13 GRAPHIC, 13	1					UR PARA SMX(BLUE) UR FOR SMX(BLUE)
	BF2–F832L–D0	GRAFICO 13 GRAPHIC, 13	1					UR PARA RM7 UR FOR RM7
26	BF2–F831Y–A0	GRAFICO 14 GRAPHIC, 14	1					UR PARA WM6 UR FOR WM6
	BF2–F831Y–B0	GRAFICO 14 GRAPHIC, 14	1					UR PARA SMX(RED) UR FOR SMX(RED)
	BF2–F831Y–C0	GRAFICO 14 GRAPHIC, 14	1					UR PARA SMX(BLUE) UR FOR SMX(BLUE)
	BF2–F831Y–D0	GRAFICO 14 GRAPHIC, 14	1					UR PARA RM7 UR FOR RM7
27	BF2–F832B–A0	EMBLEMA 15 GRAPHIC, 15	1					UR PARA RM7 UR FOR RM7
	BF2–F832B–B0	EMBLEMA 15 GRAPHIC, 15	1					UR PARA SMX(RED) UR FOR SMX(RED)
	BF2–F832B–C0	EMBLEMA 15 GRAPHIC, 15	1					UR PARA SMX(BLUE) UR FOR SMX(BLUE)
	BF2–F832B–D0	EMBLEMA 15 GRAPHIC, 15	1					UR PARA RM7 UR FOR RM7
28	BF2–F832C–A0	GRAFICO 16 GRAPHIC, 16	1					UR PARA WM6 UR FOR WM6
	BF2–F832C–B0	GRAFICO 16 GRAPHIC, 16	1					UR PARA SMX(RED) UR FOR SMX(RED)
	BF2–F832C–C0	GRAFICO 16 GRAPHIC, 16	1					UR PARA SMX(BLUE) UR FOR SMX(BLUE)
	BF2–F832C–D0	GRAFICO 16 GRAPHIC, 16	1					UR PARA RM7 UR FOR RM7

FIG. 31 GENERADOR — GENERATOR

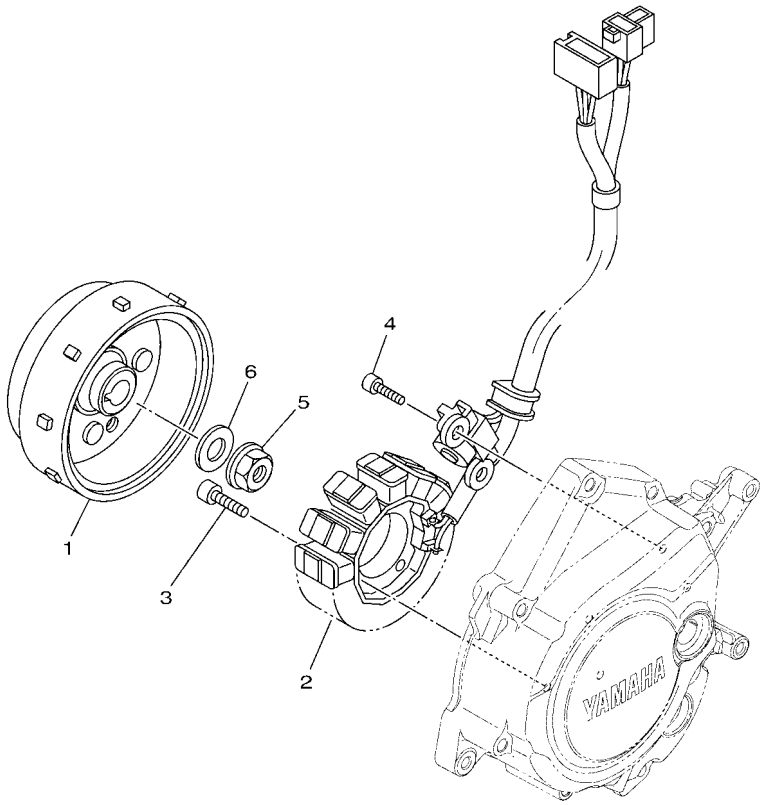

1FP1431-M340

REF. Nº	CODIGO Nº PART NO.	DESCRIPCION DESCRIPTION	BF24					OBSERVACIONES REMARKS
1	1FD–H1450–01	ROTOR COMPLETO ROTOR ASSY	1					
2	1FD–H1410–00	ESTATOR COMPLETO STATOR ASSY	1					
3	91332–06025	PERNO BOLT	3					
4	91332–06016	PERNO BOLT	2					
5	95702–12500	TUERCA DE BRIDA NUT, FLANGE	1					
6	90201–12030	ARANDELA PLANA WASHER, PLATE	1					

FIG. 32 MOTOR DE ARRANQUE — STARTING MOTOR

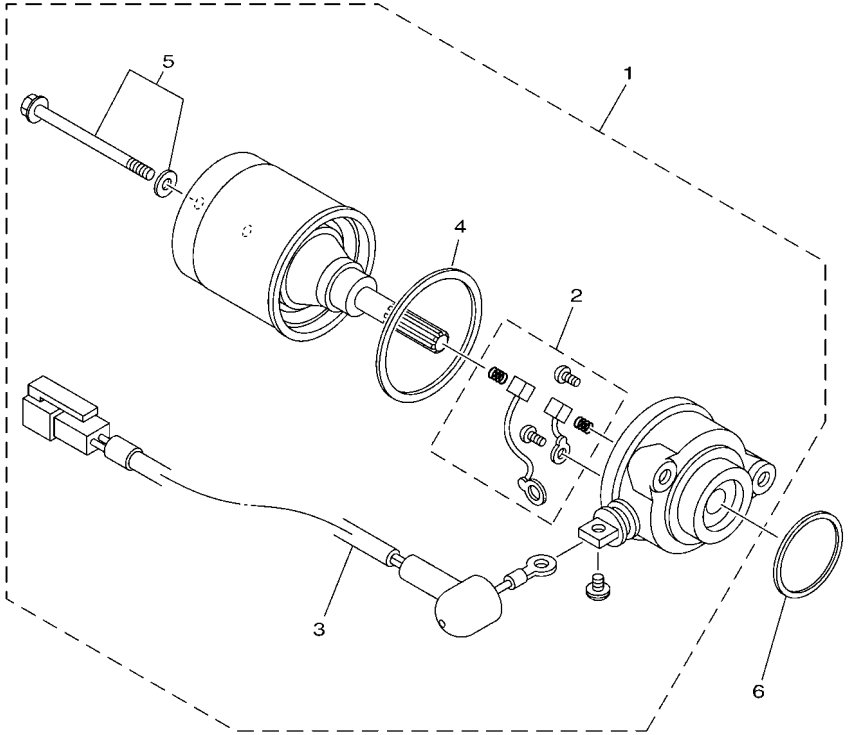

16S1422-H370

REF. Nº	CODIGO Nº PART NO.	DESCRIPCION DESCRIPTION	BF24					OBSERVACIONES REMARKS
1	1FD–H1800–00	MOTOR DE ARRANQUE COMPLETO STARTING MOTOR ASSY	1					
2	5TP–H1801–00	.JUEGO DE ESCOBILLA .BRUSH SET	1					
3	1FD–H183G–00	.CABLE DEL MOTOR COMPL. .CORD COMP.	1					
4	5D9–H1861–00	.EMPAQUETADURA .GASKET	1					
5	5D9–H1828–00	.TORNILLO DE EMPUJE 2 .SCREW SET	2					
6	93210–29803	ANILLO O O-RING	1					

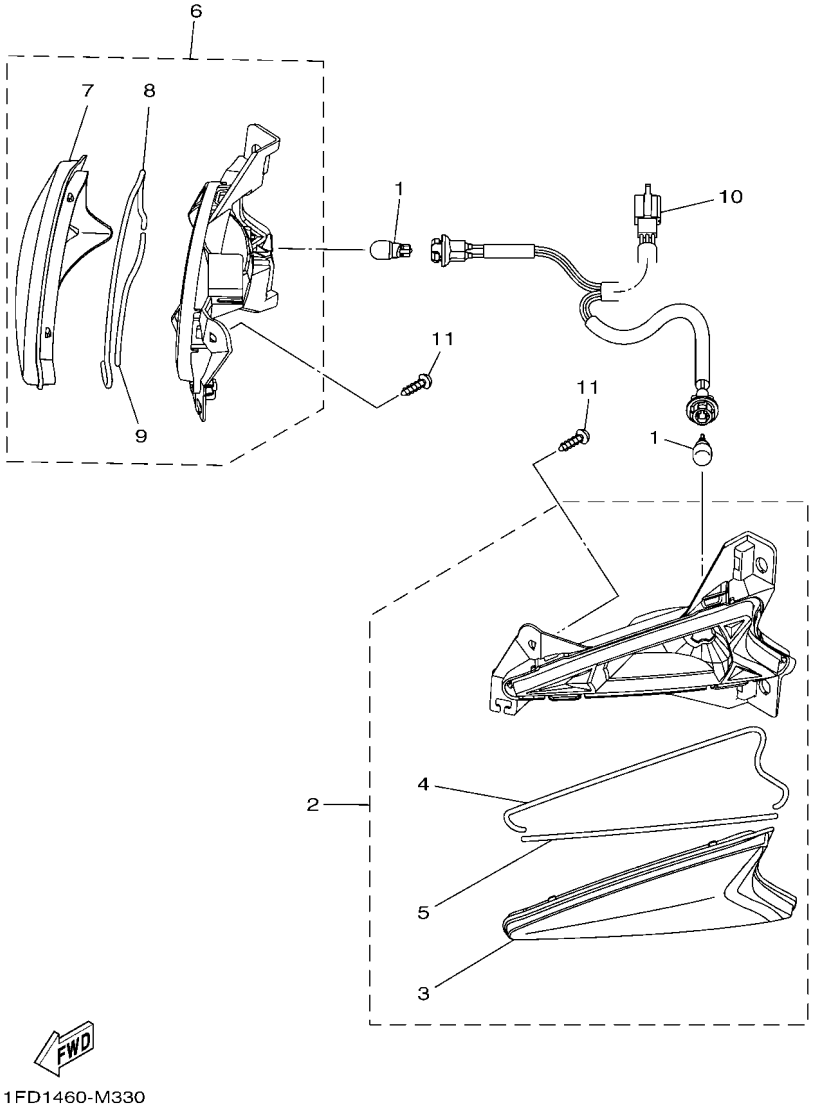

FIG. 33 LUZ DE DESTELLADOR — FLASHER LIGHT

REF. Nº	CODIGO Nº PART NO.	DESCRIPCION DESCRIPTION	BF24					OBSERVACIONES REMARKS
1	5HV–H3311–00	BOMBILLA DE DESTELLADOR (12V-1 BULB (12V-10W) AMBER	2					
2	1FD–H3310–00	DESTELLADOR DE LUZ DELANT. FRONT FLASHER LIGHT ASSY 1	1					
3	1FD–H3312–00	.LENTE DE DESTELLADOR .LENS, FLASHER	1					
4	1FD–H3313–00	.EMPAQUE DE LENTE DESTELLADOR .GASKET, FLASHER LENS	1					
5	1FD–H3343–00	.EMPAQUE LENTE DE DESTELLADOR .GASKET, FLASHER LENS	1					
6	1FD–H3320–00	DESTELLADOR DE LUZ DELANT. FRONT FLASHER LIGHT ASSY 2	1					
7	1FD–H3322–00	.LENTE DE INTERMITENTE 2 .LENS, FLASHER 2	1					
8	1FD–H3313–00	.EMPAQUE DE LENTE DESTELLADOR .GASKET, FLASHER LENS	1					
9	1FD–H3343–00	.EMPAQUE LENTE DE DESTELLADOR .GASKET, FLASHER LENS	1					
10	1FD–H4140–00	ENCASTRE DE CABLE COMPLETO SOCKET CORD ASSY	1					
11	97702–50014	TORNILLO ROSCA HEMBRA SCREW, TAPPING	2					

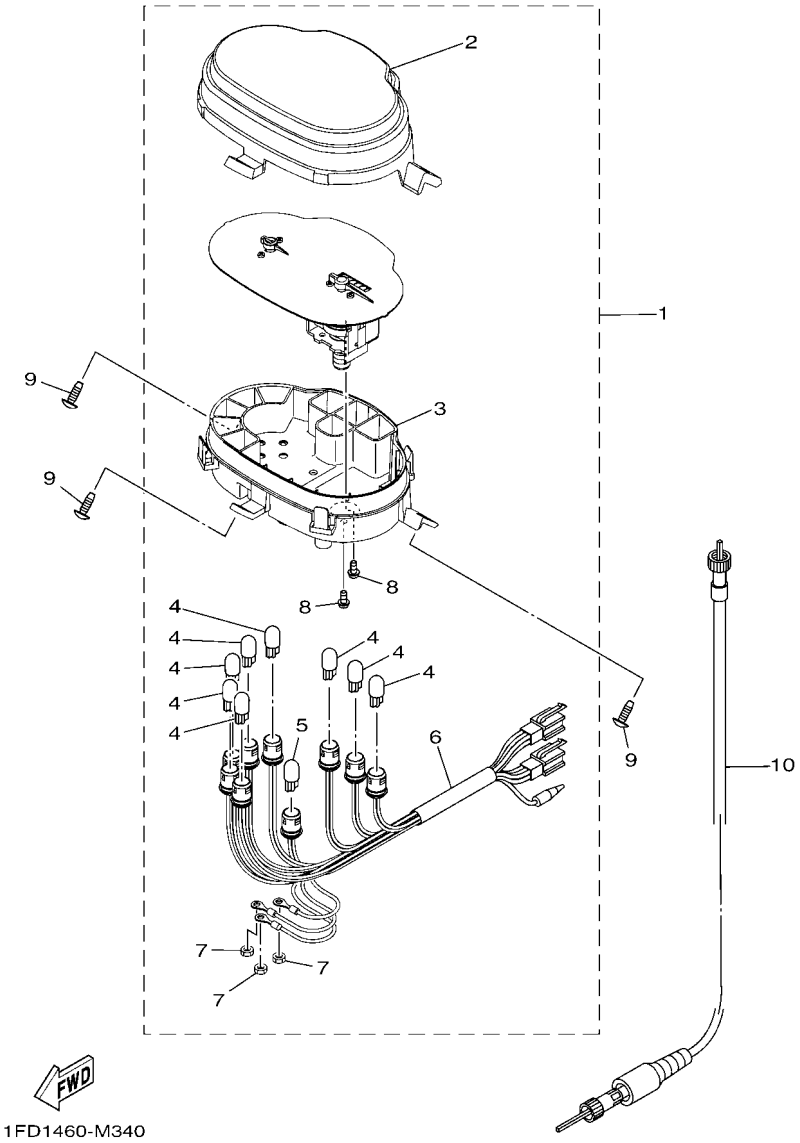

FIG. 34 MEDIDOR METER

REF. Nº	CODIGO Nº PART NO.	DESCRIPCION DESCRIPTION	BF24					OBSERVACIONES REMARKS
1	1FD–H3510–10	VELOCIMETRO COMPL. SPEEDOMETER ASSY	1					
2	1FD–H3511–00	.LENTE DE VELOCIMETRO .LENS, SPEEDOMETER	1					
3	1FD–H353F–00	.CAJA DE MEDIDOR INFERIOR .CASE, METER LOWER	1					
4	3GF–H3517–00	.AMPOLLETA .BULB (12V-1.7W)	8					
5	32P–H3517–00	.AMPOLLETA (12V-1.7W T10) .BULB (12V-1.7W T10 BLACK HEAD)	1					
6	1FD–H3509–00	.ENCASTRE DE CABLE COMPLETO .SOCKET CORD ASSY	1					
7	9530N–03600	.TUERCA .NUT	3					
8	97602–04310	.TORNILLO CON RONDONA .SCREW, PAN HEAD WITH WASHER	2					
9	97702–50016	TORNILLO ROSCA HEMBRA SCREW, TAPPING	3					
10	1FD–H3550–00	CABLE DE VELOCIMETRO COMPLETO SPEEDOMETER CABLE ASSY	1					

FIG. 35 FARO DELANTERO HEADLIGHT

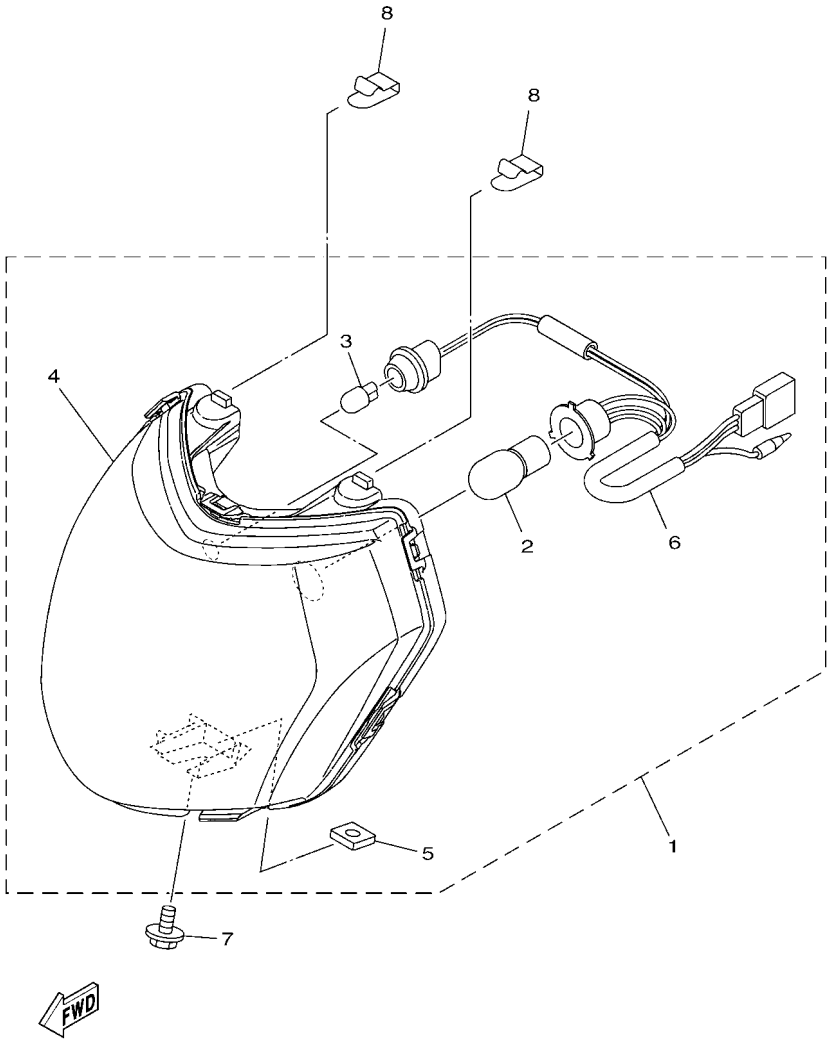

REF. Nº	CODIGO Nº PART NO.	DESCRIPCION DESCRIPTION	BF24					OBSERVACIONES REMARKS
1	1FD–H4310–10	UNIDAD DE FARO DELANTERO COMPL HEADLIGHT UNIT ASSY	1					
2	54P–H4314–20	.BOMBILLA (12V-32/32W) .BULB, HEADLIGHT (12V-32/32W)	1					
3	2S0–H3516–00	.AMPOLLETA (12V-3.4W) .BULB (12V-3.4W)	1					
4	1FD–H430A–00	.UNIDAD DE FARO DELANTERO COMPL .HEADLIGHT UNIT COMP.	1					
5	4NR–H4317–00	.TUERCA .NUT	1					
6	1FD–H4546–00	.CABLE COMPL. .CORD ASSY	1					
7	95D02–06010	CERROJO, REBORDE HUECO PROFUND BOLT, FLANGE DEEP RECESS	1					
8	3S0–H4374–00	PRESILLA CLIP	2					

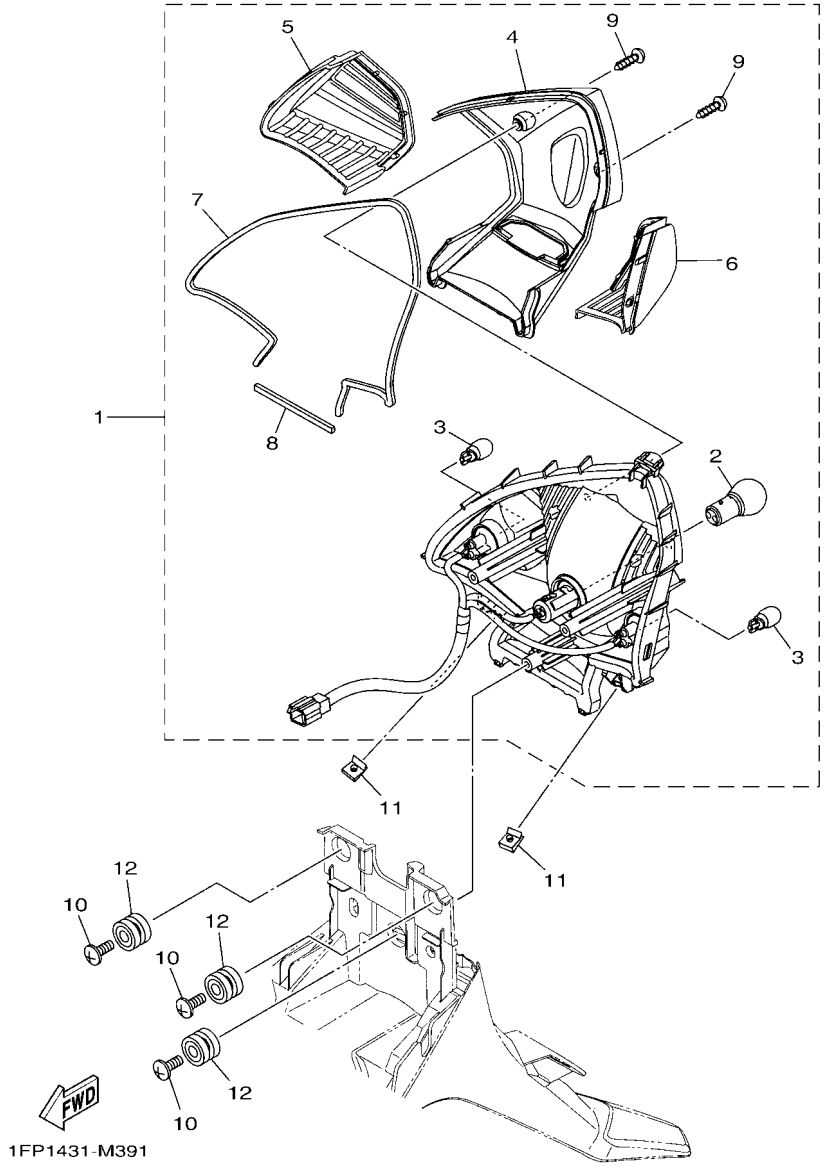

FIG. 36 LUZ DE COLA — TAILLIGHT

REF. Nº	CODIGO Nº PART NO.	DESCRIPCION DESCRIPTION	BF24					OBSERVACIONES REMARKS
1	1FD–H4710–00	UNIDAD FARO TRASERO COMPL. TAILLIGHT UNIT ASSY	1					
2	4AC–H4714–00	.BOMBILLA (12V-21/5W) .BULB (12V-21/5W)	1					
3	5LL–H3311–00	.BOMBILLA DE DESTELLADOR (12V-1 .BULB (12V-10W) AMBER	2					
4	1FD–H4709–00	.UNIDAD FARO TRASERO SUB COMPL. .TAIL LIGHT SUB-ASSY	1					
5	1FD–H3342–00	.LENTE DE DESTELLADOR .LENS, FLASHER 2	1					
6	1FD–H3332–00	.LENTE DE DESTELLADOR .LENS, FLASHER	1					
7	1FD–H4723–00	.EMPAQUE LENTE FARO TRASERO .GASKET, TAIL LENS	1					
8	1FD–H4712–00	.JUNTA, LUZ DE COLA .GASKET, TAILLIGHT	1					
9	9770L–40620	.TORNILLO ROSCA HEMBRA .SCREW, TAPPING	2					
10	90160–05811	TORNILLO REDONDO ROSCA HEMBRA SCREW, ROUND TAPPING	3					
11	90183–05807	TUERCA DE RESORTE NUT, SPRING	2					
12	90480–16004	TAPON GROMMET	3					

FIG. 37 INTERRUPTOR DE MANILLAR&PALANC HANDLE SWITCH & LEVER

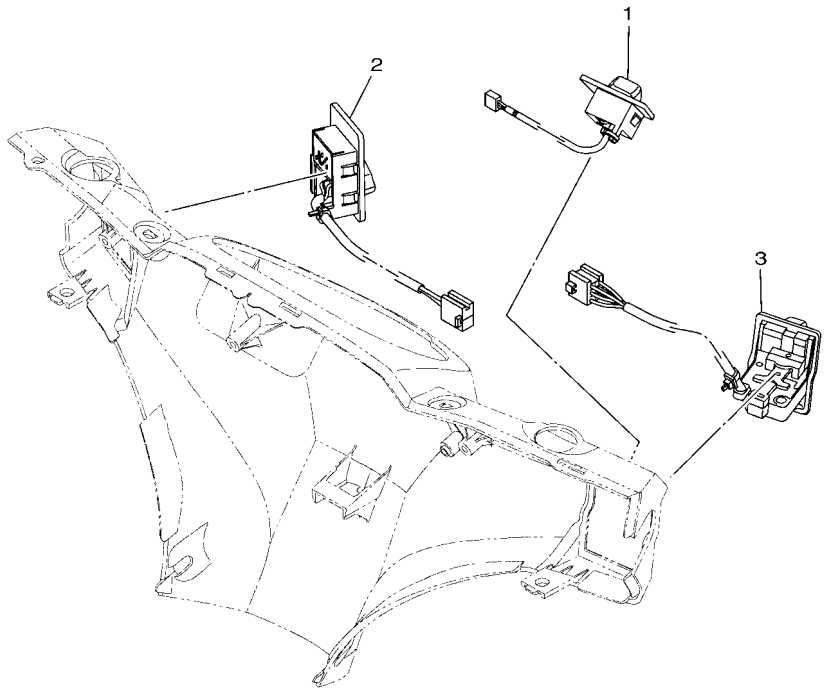

BF21261-S370

REF. Nº	CODIGO Nº PART NO.	DESCRIPCION DESCRIPTION	BF24					OBSERVACIONES REMARKS
1	1FD–H3976–00	INTERRUPTOR DE MANIJA 1 SWITCH, HANDLE 1	1					
2	1FD–H3976–10	INTERRUPTOR DE MANIJA 1 SWITCH, HANDLE 1	1					
3	1FD–H3975–10	INTERRUPTOR DE MANIJA 2 SWITCH, HANDLE 2	1					

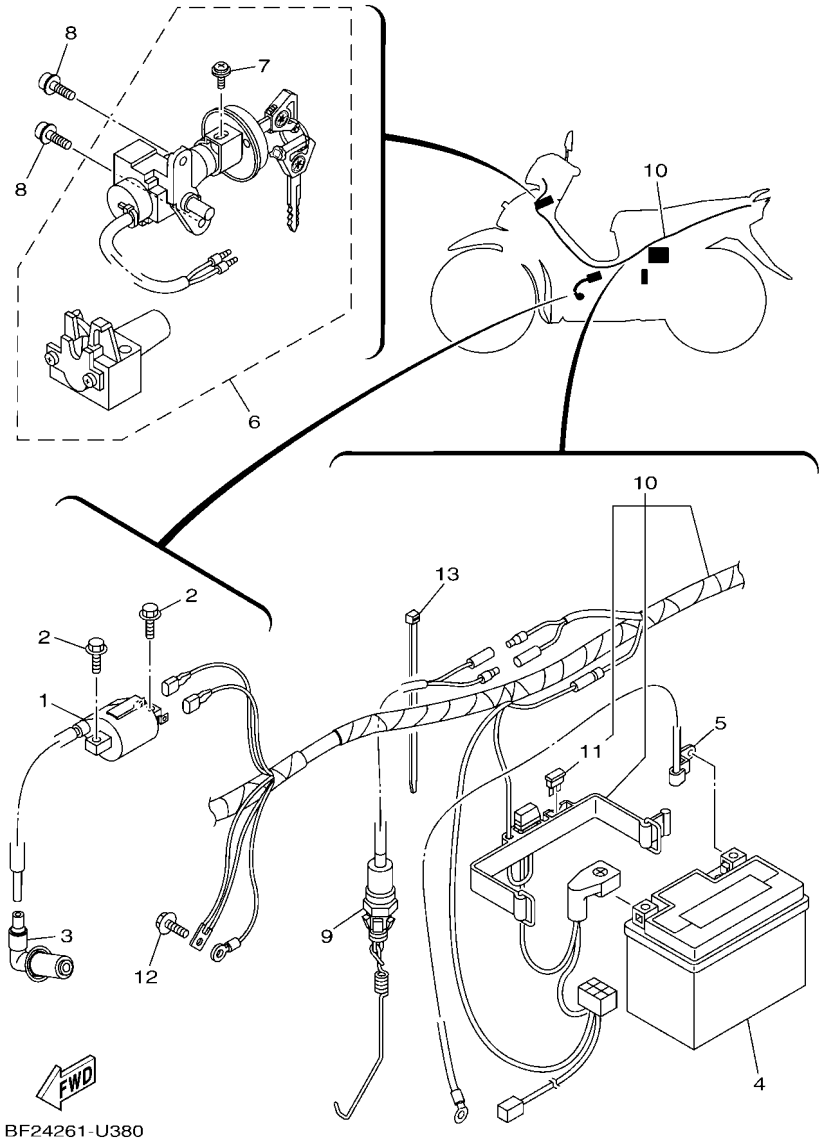

FIG. 38 EQUIPO ELECTRICO 1 ELECTRICAL 1

REF. Nº	CODIGO Nº PART NO.	DESCRIPCION DESCRIPTION	BF24					OBSERVACIONES REMARKS
1	3C1–H2310–01	BOBINA DE ENCENDIDO COMPLETA IGNITION COIL ASSY	1					
2	95E32–06016	CERROJO, REBORDE HUECO PROFUND BOLT, FLANGE DEEP RECESS	2					
3	2PH–H2370–10	TAPON DE BUJIA COMPLT PLUG CAP ASSY	1					
4	14D–H2100–00	BATERIA COMPLETA (YUASA YTZ4V) BATTERY ASSY (YUASA YTZ4V)	1					
5	1DY–H2116–00	CABLE CONDUCTOR NEGATIVO WIRE, MINUS LEAD	1					
6	1FD–XH252–20	INTERRUPTOR PRINCIPAL SUB ASSY MAIN SWITCH SUB ASSY.	1					
7	97602–05310	.TORNILLO CON RONDONA .SCREW, PAN HEAD WITH WASHER	1					
8	90110–06883	TORNILLO ALLEN BOLT, HEXAGON SOCKET HEAD	2					
9	1FD–H2530–00	INTERRUPTOR DE PARADA COMPLETO STOP SWITCH ASSY	1					
10	BF2–H2590–00	CONJUNTO DE CABLES WIRE HARNESS ASSY	1					
11	5ML–H2151–00	.FUSIBLE (30A) .FUSE (30A)	1					
12	95E32–06014	CERROJO, REBORDE HUECO PROFUND BOLT, FLANGE DEEP RECESS	1					
13	90465–13152	BRIDA CLAMP	1					

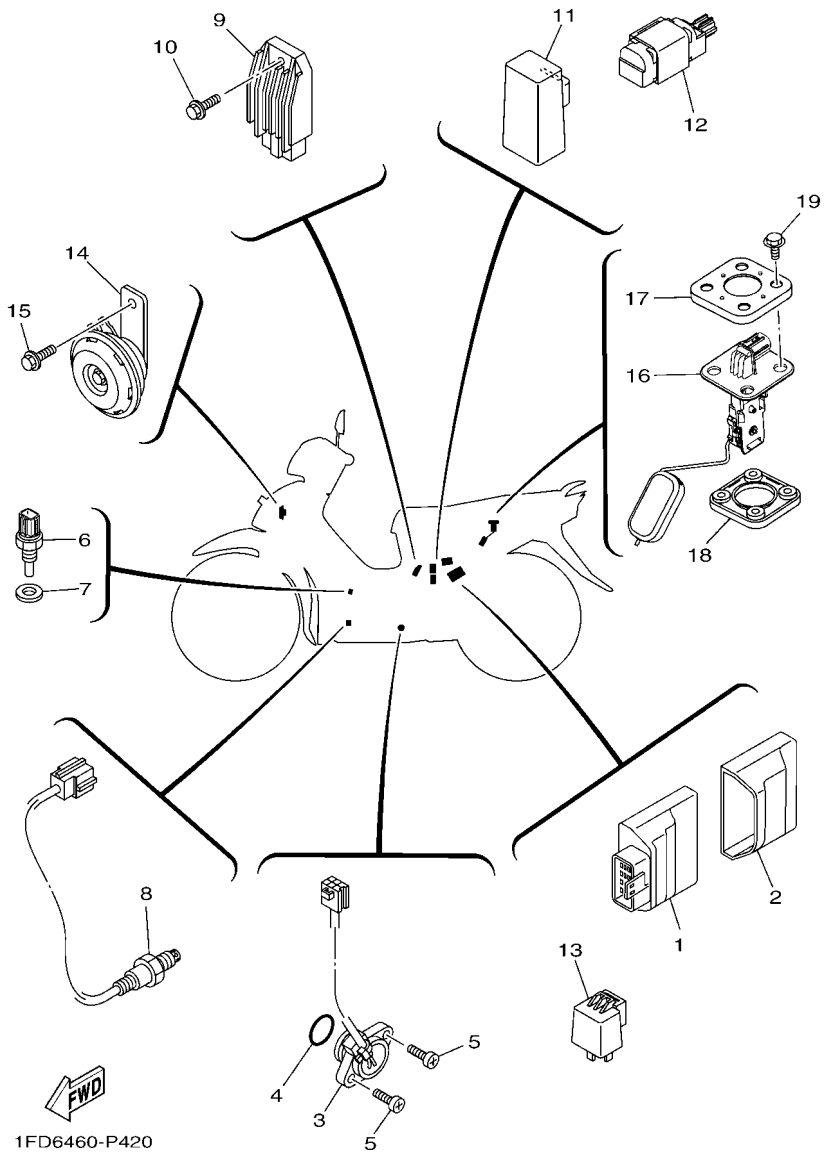

FIG. 39 EQUIPO ELECTRICO 2 — ELECTRICAL 2

REF. Nº	CODIGO Nº PART NO.	DESCRIPCION DESCRIPTION	BF24					OBSERVACIONES REMARKS
1	BF2–H591A–00	UNIDAD CONTROL ENGINE CONTROL UNIT ASSY	1					
2	1FD–H5546–10	BANDA BAND	1					
3	31B–H2540–01	INTERRUPTOR NEUTRAL COMPL NEUTRAL SWITCH ASSY	1					
4	93210–21801	ANILLO O O-RING	1					
5	98502–05016	TORNILLO SCREW, PAN HEAD	2					
6	54P–H3591–00	UNIDAD TERMOSTATO THERMO UNIT	1					
7	90430–10806	JUNTA GASKET	1					
8	2BM–H592A–10	SENSOR SENSOR, OXYGEN	1					
9	1FD–H1960–00	RECTIFICADOR Y REGULADOR RECTIFIER & REGULATOR ASSY	1					
10	95E32–06014	CERROJO, REBORDE HUECO PROFUND BOLT, FLANGE DEEP RECESS	1					
11	1S7–H1940–10	CONJUNTO ARRANCADOR RELEVO STARTER RELAY ASSY	1					
12	1FD–H1965–00	CONDENSADOR CONDENSER, SMOOTHING	1					
13	1FD–H3350–00	RELE DE DESTELLADOR COMPL. FLASHER RELAY ASSY	1					
14	5BU–H3371–10	BOCINA HORN	1					
15	95D02–06010	CERROJO, REBORDE HUECO PROFUND BOLT, FLANGE DEEP RECESS	1					
16	1FD–H5752–00	UNIDAD TRANSM. MED. COMBUST. SENDER UNIT ASSY, FUEL METER	1					
17	5ER–H5757–00	SEGURO RETAINER	1					
18	1DY–H5753–00	EMPAQUE DE UNIDAD TRANSMISORA GASKET, SENDER UNIT	1					
19	90119–05022	TORNILLO CON ARANDELA BOLT, WITH WASHER	4					

INDICE NUMERICO
NUMERICAL INDEX

CODIGO Nº PART NO.	REF. Nº
36Y–2589H–00	28 – 9
1FD–E1102–10	1 – 1
54P–E111F–00	4 – 4
54P–E1133–10	1 – 2
1FD–E1166–10	8 – 3
1FC–E1173–00	1 – 9
54P–E1173–00	1 – 9
54P–E1181–00	1 – 13
1FD–E1191–00	1 – 7
1FD–E1193–00	1 – 10
2SU–E1310–00	1 – 16
1FC–E1351–00	1 – 17
1DY–E1422–10	2 – 5
1DY–E1603–10	2 – 11
1DY–E1605–10	2 – 11
1DY–E1607–10	2 – 11
1DY–E1631–10	2 – 8
54P–E1633–10	2 – 9
1DY–E1636–09	2 – 8
1DY–E1638–09	2 – 8
1DY–E1651–00	2 – 4
1DY–E1681–00	2 – 2
2PH–E2111–00	3 – 1
2XC–E2113–00	3 – 4
1KP–E2117–00	3 – 6
5TL–E2118–00	3 – 5
54P–E2119–00	3 – 3
1FD–E2121–00	3 – 2
2PH–E2126–00	3 – 7
54P–E2146–00	3 – 12
2PH–E2151–00	3 – 8
33S–E2159–01	3 – 10
1DY–E2170–10	4 – 1
1DY–E2176–00	4 – 6
2PH–E2210–00	4 – 10
2SU–E2213–00	4 – 12
5MX–E2222–00	4 – 11
52B–E2228–00	4 – 14
54P–E2231–00	4 – 8
54P–E2241–00	4 – 9
44D–E2662–00	3 – 11
1DY–E3300–00	5 – 1
5D9–E3324–00	5 – 7
4LS–E3411–00	5 – 5
4ST–E3411–00	5 – 5
1S7–E3440–00	5 – 6
38B–E3440–00	5 – 6
1FD–E3447–00	5 – 8

CODIGO Nº PART NO.	REF. Nº
54P–E3575–00	6 – 13
1FD–E3585–10	6 – 1
1FD–E3750–10	6 – 4
2SU–E3761–00	6 – 7
2SU–E3770–00	6 – 6
1DY–E3907–30	22 – 5
2SU–E3938–00	6 – 10
1FD–E3971–11	22 – 9
1DY–E3993–00	22 – 14
1ST–E4137–00	6 – 11
2SU–E4147–00	6 – 8
2SU–E41A1–00	6 – 9
1FD–E4411–10	6 – 14
1FD–E4412–00	6 – 16
1FD–E4426–00	6 – 25
1FD–E442G–00	6 – 26
4ST–E443E–00	6 – 21
5D9–E443G–00	6 – 23
1FD–E4452–00	6 – 19
1FD–E4453–10	6 – 17
1FD–E4462–00	6 – 18
14D–E4613–00	7 – 13
1FD–E4711–10	7 – 1
1FD–E4718–00	7 – 2
5TP–E4747–00	29 – 28
31B–E5113–00	9 – 9
1DY–E5150–00	8 – 1
5D9–E5155–00	8 – 5
5D9–E5362–10	9 – 19
4ST–E5371–00	8 – 2
16S–E5377–01	9 – 12
1FD–E5411–00	9 – 1
1FD–E5418–00	9 – 10
1FD–E5421–00	9 – 13
1FC–E5451–10	9 – 2
1FC–E5461–10	9 – 14
2P2–E5512–00	11 – 1
1DY–E5524–00	11 – 3
1DY–E5580–00	11 – 6
1FD–E5620–00	10 – 11
5D9–E5641–00	10 – 2
4WH–E5644–00	10 – 5
5D9–E5645–10	10 – 8
5D9–E5661–20	10 – 1
5D9–E5664–20	10 – 9
5D9–E5671–10	10 – 4
1FD–E6116–00	12 – 1
1FD–E6135–00	12 – 23

CODIGO Nº PART NO.	REF. Nº
1FD–E6150–00	12 – 13
1PB–E6194–00	12 – 21
1FD–E6321–00	12 – 17
1FD–E6324–00	12 – 15
1PB–E6333–00	12 – 20
5HV–E6346–00	15 – 9
1FD–E6350–00	12 – 16
1FD–E6351–00	12 – 19
1FD–E6356–00	12 – 26
5D9–E6357–00	12 – 25
1FD–E6371–00	12 – 14
1FD–E6383–00	12 – 18
5LM–E6512–00	12 – 6
5D9–E6586–00	12 – 7
1DY–E6611–00	12 – 2
1FD–E6620–00	12 – 3
1FD–E6626–00	12 – 4
1PB–E6628–00	12 – 22
1DY–E7121–01	13 – 6
1DY–E7121–11	13 – 6
1DY–E7131–00	13 – 2
1DY–E7141–01	13 – 3
1DY–E7211–00	13 – 18
1DY–E7211–10	13 – 18
1DY–E7231–01	13 – 17
1FD–E7241–00	13 – 16
1DY–E7402–10	13 – 13
1DY–E7411–00	13 – 1
1FD–E7411–10	13 – 1
1S7–E7456–00	13 – 26
3C1–E7471–00	13 – 11
1DY–E8101–00	15 – 1
BF2–E8110–00	15 – 23
1EG–E8113–01	15 – 24
1JD–E8120–11	14 – 7
1DY–E8140–00	15 – 7
1FD–E8172–10	15 – 3
5LM–E8173–00	15 – 15
1FD–E8179–10	15 – 2
1FD–E817A–00	15 – 16
5D9–E8181–00	15 – 4
2SU–E8185–00	14 – 2
5D9–E8186–00	15 – 17
1FD–E8337–00	15 – 8
5D9–E8511–00	14 – 11
5D9–E8512–00	14 – 12
5D9–E8531–00	14 – 9
1FD–E8540–00	14 – 1

CODIGO Nº PART NO.	REF. Nº
5TP–E8542–00	14 – 5
1DY–E8699–00	15 – 22
BF2–F1110–10	16 – 1
1FD–F139R–00	16 – 9
BF2–F1511–10–P0	17 – 1
BF2–F1511–10–P1	17 – 1
BF2–F1511–10–P2	17 – 1
BF2–F1556–00	17 – 2
1FD–F1611–00	17 – 7
1FD–F1711–00	18 – 1
1FD–F171E–00	18 – 11
1FD–F1721–00	18 – 3
1FD–F172E–00	18 – 18
BF2–F1731–00–P0	18 – 5
BF2–F1737–00	18 – 19
BF2–F173E–A0	18 – 20
BF2–F173E–B0	18 – 20
BF2–F173E–C0	18 – 20
BF2–F173E–D0	18 – 20
BF2–F173F–A0	18 – 21
BF2–F173F–B0	18 – 21
BF2–F173F–C0	18 – 21
BF2–F173F–D0	18 – 21
BF2–F1741–00–P0	18 – 8
BF2–F174G–A0	18 – 22
BF2–F174G–B0	18 – 22
BF2–F174G–C0	18 – 22
BF2–F174G–D0	18 – 22
BF2–F174H–A0	18 – 23
BF2–F174H–B0	18 – 23
BF2–F174H–C0	18 – 23
BF2–F174H–D0	18 – 23
1FD–F194J–00	29 – 30
BF2–F2100–10–33	19 – 1
3HB–F2123–00	19 – 2
1FD–F2141–10	19 – 4
1FD–F2151–00	19 – 3
1FD–F2210–10	19 – 10
1FD–F2311–00	19 – 8
1FD–F3100–10	21 – 1
1FD–F3110–10	21 – 8
1FC–F3111–10	21 – 19
1FD–F3126–10	21 – 5
1FD–F3136–10	21 – 2
BF2–F313B–00	30 – 22
1FC–F3141–10	21 – 15
5LM–F3144–00	21 – 14
3AY–F3145–00	21 – 3

CODIGO Nº PART NO.	REF. Nº
3AY–F3145–00	21 – 6
2JG–F3147–00	21 – 20
5D9–F3152–00	21 – 11
5P0–F3153–00	21 – 21
5P0–F3156–00	21 – 4
	21 – 7
2JG–F3157–00	21 – 10
2BU–F3158–00	21 – 12
5D9–F3170–00	21 – 9
278–F3181–50	21 – 13
1FD–F3317–00	20 – 17
1FD–F331A–00	20 – 18
1FD–F331E–00	20 – 15
1FD–F3340–10	21 – 16
31B–F3346–00	21 – 18
50P–F3411–00	20 – 4
4FP–F3411–10	21 – 17
50P–F3412–00	20 – 3
50P–F3412–10	20 – 1
5LM–F3415–00	20 – 7
3AY–F3416–00	20 – 6
50P–F341E–00	20 – 5
50P–F341E–10	20 – 2
1FD–F3472–00	20 – 20
1FD–F3874–00	20 – 11
BF2–F4110–00	22 – 1
5D9–F414G–00	22 – 2
54P–F414G–10	22 – 6
5D9–F414G–10	22 – 3
1FP–F4186–00	22 – 12
1FP–F4187–00	22 – 13
1FD–F41B1–00	22 – 15
1DY–F4491–00	22 – 7
1DY–F4610–00	22 – 10
4YY–F4612–00	22 – 11
BF2–F470F–00	23 – 3
1FD–F4726–01	23 – 4
1FD–F4727–00	23 – 6
BF2–F4730–00	23 – 1
1FD–F473R–00	23 – 7
1BN–F4741–10	23 – 2
BF2–F4773–00–P0	23 – 13
1FD–F5168–00–33	24 – 1
BF2–F5168–00–33	24 – 1
3AY–F5181–01	24 – 8
1DY–F518A–10	25 – 1
5TP–F5190–01	24 – 11
1LB–F530K–00	26 – 8

CODIGO Nº PART NO.	REF. Nº
1S7–F5321–00–33	26 – 7
1FD–F5338–00–33	26 – 1
BF2–F5338–00–33	26 – 1
5D9–F533A–00	26 – 12
3Y6–F5351–00	26 – 13
2P2–F5355–00	26 – 11
1DY–F5364–00	26 – 6
5D9–F5366–00	26 – 16
BF2–F5371–00	26 – 36
1FD–F5377–00	26 – 31
1FD–F5381–10	26 – 27
5D9–F5383–00	26 – 30
5LM–F5389–00	26 – 32
1FD–F5412–00	26 – 21
1FD–F5414–00	26 – 24
5D9–F5441–00	26 – 20
2BM–F5802–00	25 – 5
5YP–F5803–50	25 – 6
2BM–F5805–00	25 – 10
5P0–F580A–00	28 – 6
1FD–F580U–01	25 – 4
1FD–F582U–00	25 – 2
1FD–F583T–00	28 – 4
1FD–F5852–00	28 – 8
2ND–F5854–00	28 – 7
2ND–F5855–00	28 – 10
5TL–F5867–01	28 – 11
1FD–F5870–00	28 – 5
1FD–F5872–10	28 – 1
1FD–F5875–00	20 – 13
1FD–F5886–00	20 – 12
2BM–F5917–00	25 – 7
2BM–F5919–00	25 – 14
2BM–F5920–00	25 – 12
5YP–F5924–00	25 – 15
5YP–F5925–01	25 – 11
5YP–F5937–00	25 – 8
2BM–F5939–00	25 – 13
1FD–F6110–00	27 – 1
BF2–F6143–00–P0	27 – 4
BF2–F6143–00–P1	27 – 4
BF2–F6143–00–P2	27 – 4
1FD–F6145–00	27 – 6
44D–F6240–00	27 – 10
44D–F6241–00	27 – 11
54P–F6246–00	27 – 19
1FD–F6280–00	27 – 12
1FD–F6281–10	27 – 16

INDICE NUMERICO
NUMERICAL INDEX

CODIGO Nº PART NO.	REF. Nº
1FD–F6282–10	27 – 17
1FD–F6290–00	27 – 13
1FD–F6301–10	27 – 14
BF2–F7111–00	29 – 1
1FD–F7112–00	29 – 3
5D9–F7114–00	29 – 2
BF2–F7211–00	29 – 6
BF2–F7231–00	29 – 8
1FD–F7311–00	29 – 14
1FD–F7411–00	29 – 18
1DY–F7413–00	29 – 20
1FD–F7426–00	29 – 7
1FD–F7431–00	29 – 21
1FD–F7433–00	29 – 22
1FD–F7441–00	29 – 23
1FD–F7444–00	29 – 24
1FD–F7445–00	29 – 25
2DP–F814F–00	23 – 15
3AY–F8152–00	23 – 16
1FD–F8307–00	30 – 2
BF2–F8311–00–P0	30 – 1
BF2–F8311–00–P1	30 – 1
BF2–F8311–00–P2	30 – 1
1FD–F8312–30	30 – 5
BF2–F831Y–A0	30 – 26
BF2–F831Y–B0	30 – 26
BF2–F831Y–C0	30 – 26
BF2–F831Y–D0	30 – 26
1FD–F8321–00	30 – 9
BF2–F832B–A0	30 – 27
BF2–F832B–B0	30 – 27
BF2–F832B–C0	30 – 27
BF2–F832B–D0	30 – 27
BF2–F832C–A0	30 – 28
BF2–F832C–B0	30 – 28
BF2–F832C–C0	30 – 28
BF2–F832C–D0	30 – 28
BF2–F832L–A0	30 – 25
BF2–F832L–B0	30 – 25
BF2–F832L–C0	30 – 25
BF2–F832L–D0	30 – 25
BF2–F836D–00	30 – 23
	30 – 24
1FD–F836T–00	30 – 20
1FD–F836U–00	30 – 21
1FD–F842N–00	30 – 15
1FD–H1410–00	31 – 2
1FD–H1450–01	31 – 1

CODIGO Nº PART NO.	REF. Nº
1FD–H1800–00	32 – 1
5TP–H1801–00	32 – 2
5D9–H1828–00	32 – 5
1FD–H183G–00	32 – 3
5D9–H1861–00	32 – 4
1S7–H1940–10	39 – 11
1FD–H1960–00	39 – 9
1FD–H1965–00	39 – 12
14D–H2100–00	38 – 4
1DY–H2116–00	38 – 5
5ML–H2151–00	38 – 11
3C1–H2310–01	38 – 1
2PH–H2370–10	38 – 3
1FD–H2530–00	38 – 9
31B–H2540–01	39 – 3
BF2–H2590–00	38 – 10
1FD–H3310–00	33 – 2
5HV–H3311–00	33 – 1
5LL–H3311–00	36 – 3
1FD–H3312–00	33 – 3
1FD–H3313–00	33 – 4
	33 – 8
1FD–H3320–00	33 – 6
1FD–H3322–00	33 – 7
1FD–H3332–00	36 – 6
1FD–H3342–00	36 – 5
1FD–H3343–00	33 – 5
	33 – 9
1FD–H3350–00	39 – 13
5BU–H3371–10	39 – 14
1FD–H3509–00	34 – 6
1FD–H3510–10	34 – 1
1FD–H3511–00	34 – 2
2S0–H3516–00	35 – 3
32P–H3517–00	34 – 5
3GF–H3517–00	34 – 4
1FD–H353F–00	34 – 3
1FD–H3550–00	34 – 10
54P–H3591–00	39 – 6
2PV–H3922–00	28 – 12
1FD–H3975–10	37 – 3
1FD–H3976–00	37 – 1
1FD–H3976–10	37 – 2
2DP–H3980–00	28 – 15
1FD–H4140–00	33 – 10
1FD–H430A–00	35 – 4
1FD–H4310–10	35 – 1
54P–H4314–20	35 – 2

CODIGO Nº PART NO.	REF. Nº
4NR–H4317–00	35 – 5
3S0–H4374–00	35 – 8
1FD–H4546–00	35 – 6
1FD–H4709–00	36 – 4
1FD–H4710–00	36 – 1
1FD–H4712–00	36 – 8
4AC–H4714–00	36 – 2
1FD–H4723–00	36 – 7
1FD–H5546–10	39 – 2
1FD–H5752–00	39 – 16
1DY–H5753–00	39 – 18
5ER–H5757–00	39 – 17
BF2–H591A–00	39 – 1
2BM–H592A–10	39 – 8
4C9–W0048–00	25 – 9
1DY–WE140–10	2 – 1
1FD–WE445–00	6 – 15
1FD–XH252–20	38 – 6
90101–06046	26 – 14
90101–08847	26 – 22
90105–06893	9 – 4
90105–088D9	16 – 4
90105–088E0	16 – 2
90105–088E1	4 – 5
90105–10879	19 – 11
90105–10882	19 – 12
90105–10896	27 – 2
90109–06255	28 – 13
90109–08816	26 – 37
90109–08849	26 – 41
90109–08850	29 – 15
90110–05801	5 – 2
90110–06868	1 – 15
90110–06883	38 – 8
90111–06807	7 – 3
90111–08815	25 – 3
90116–08843	8 – 10
90119–05022	39 – 19
90119–06117	19 – 9
90119–06810	6 – 28
90119–06885	22 – 4
90119–068B7	17 – 8
90149–06159	14 – 3
90149–10805	25 – 16
90159–06810	18 – 7
	18 – 10
	18 – 16
	30 – 3

CODIGO Nº PART NO.	REF. Nº
90159–06810	30 – 7
90160–05811	36 – 10
90170–05803	3 – 9
90170–06809	26 – 34
90179–06835	29 – 11
90179–08518	1 – 11
90179–08826	26 – 23
90179–10805	16 – 8
90179–10821	10 – 12
90179–12802	12 – 11
90179–14001	12 – 24
90179–25033	20 – 8
90183–05807	17 – 5
	17 – 9
	23 – 8
	27 – 5
	30 – 4
	30 – 16
	36 – 11
90185–10011	27 – 3
90185–10012	24 – 9
90185–12804	26 – 28
90201–06079	7 – 6
90201–06827	30 – 12
	30 – 19
90201–08043	16 – 5
90201–08055	7 – 9
90201–08085	18 – 15
90201–08116	7 – 10
90201–10035	24 – 10
90201–10118	28 – 3
90201–10831	16 – 6
90201–12019	12 – 10
90201–12028	19 – 6
90201–12030	31 – 6
90201–127F4	15 – 10
90201–12823	26 – 29
90201–12824	15 – 14
90201–12834	19 – 5
90201–15700	13 – 7
	13 – 20
90201–167P7	12 – 5
90201–178D3	15 – 21
90201–19801	11 – 5
90206–19802	10 – 10
90209–17285	13 – 4
90209–18208	13 – 14
90249–12008	29 – 10

CODIGO Nº PART NO.	REF. Nº
90269–06812	27 – 9
	30 – 17
90280–03017	2 – 7
90340–12816	5 – 3
90340–14806	9 – 7
90387–06023	7 – 4
90387–06803	6 – 27
90387–06814	30 – 10
90387–06857	17 – 3
	20 – 10
90387–068D7	23 – 10
90387–068L6	18 – 14
90387–07819	17 – 10
90387–08813	29 – 29
90387–10277	24 – 7
90387–127Y0	26 – 17
90387–12860	26 – 2
90387–15817	13 – 19
90387–20810	12 – 12
90401–10812	28 – 2
90430–10806	39 – 7
90430–10807	1 – 5
90430–12803	5 – 4
90464–36800	27 – 20
90465–13152	38 – 13
90467–110A3	6 – 22
90467–12802	6 – 24
90467–13808	6 – 29
	8 – 4
90468–23194	10 – 3
90480–01559	16 – 10
90480–01813	18 – 17
90480–12581	7 – 5
90480–12808	18 – 13
90480–13815	30 – 11
90480–14806	23 – 9
90480–16004	36 – 12
90501–04805	12 – 9
90501–06022	14 – 6
90501–06800	14 – 10
90501–10245	29 – 9
90501–125E9	15 – 13
90506–12001	26 – 9
90506–15001	26 – 10
90506–23809	29 – 17
90506–35806	29 – 5
90508–26808	10 – 7
90508–26815	14 – 8

CODIGO Nº PART NO.	REF. Nº
90520–15807	30 – 14
90560–10292	24 – 2
91312–06012	11 – 7
91312–06025	28 – 16
91332–05010	22 – 8
91332–06012	13 – 12
91332–06016	31 – 4
91332–06020	6 – 3
91332–06025	31 – 3
91337–08020	15 – 25
91401–30030	29 – 4
91402–20012	26 – 40
	29 – 12
	29 – 27
91702–06035	29 – 26
91810–14809	1 – 14
	8 – 6
	8 – 9
	9 – 3
	9 – 15
92012–05016	27 – 15
92902–06600	29 – 13
92902–08200	26 – 38
93101–10810	9 – 21
93102–12891	15 – 5
93102–16801	10 – 13
93102–20892	13 – 24
93106–20816	24 – 3
93106–26815	26 – 18
93210–068F7	15 – 18
93210–12801	4 – 2
93210–148F8	9 – 8
93210–198F9	9 – 20
93210–21801	39 – 4
93210–27804	6 – 2
93210–29803	32 – 6
93210–418G7	26 – 5
93210–60800	5 – 11
93306–002XK	4 – 3
	13 – 22
93306–054Y2	13 – 9
93306–054YK	26 – 19
93306–252XR	13 – 10
93306–254Y1	13 – 23
93306–300X9	24 – 4
93306–351Y2	26 – 4
93306–351Y3	26 – 3
93306–355Y2	2 – 6

INDICE NUMERICO
NUMERICAL INDEX

CODIGO Nº PART NO.	REF. Nº
93310–419X6	11 – 4
93310–528YA	2 – 3
93340–212Y2	15 – 11
93410–20038	13 – 5
93410–22039	13 – 15
93440–10153	1 – 3
93450–14088	2 – 10
93503–16807	12 – 27
93604–10801	15 – 12
93604–12831	14 – 4
93606–10800	12 – 8
93608–34800	11 – 2
93608–50149	15 – 6
93812–14818	13 – 25
94107–17849	24 – 5
94107–17868	24 – 5
94108–17845	26 – 25
94108–17864	26 – 25
94207–17810	24 – 6
94208–17810	26 – 26
94222–17800	24 – 6
94227–17805	26 – 26
94568–H5090	4 – 7
94700–00372	1 – 12
95302–06600	26 – 15
	26 – 33
95302–08600	26 – 39
95302–08700	29 – 16
9530N–03600	34 – 7
95602–06100	28 – 14
95602–08200	16 – 7
95602–12200	19 – 7
95612–08625	1 – 6
95702–06500	15 – 19
	23 – 5
95702–08500	7 – 11
95702–12500	31 – 5
95812–10120	16 – 3
95D02–06010	35 – 7
	39 – 15
95D02–06012	20 – 19
95D02–06016	9 – 11
95D02–06035	23 – 12
95D02–08020	7 – 8
95D32–06016	23 – 14
95D32–06025	6 – 12
95D32–06030	1 – 8
95D32–08016	29 – 19

CODIGO Nº PART NO.	REF. Nº
95D32–08016	29 – 31
95D32–08040	7 – 12
95E32–06010	13 – 27
	20 – 14
95E32–06014	38 – 12
	39 – 10
95E32–06016	20 – 9
	38 – 2
95E32–06020	4 – 13
	5 – 9
	6 – 5
	20 – 16
95E32–06025	23 – 11
95E32–06030	9 – 17
95E32–06040	8 – 8
	9 – 16
95E32–06050	9 – 5
	9 – 18
95E32–06055	8 – 7
95E32–06060	9 – 6
95E32–06100	5 – 10
95E32–10014	1 – 4
97002–06020	30 – 13
97022–06016	17 – 11
97022–06020	17 – 4
97602–04310	34 – 8
97602–04312	28 – 17
97602–05310	38 – 7
97702–50012	17 – 6
	27 – 7
97702–50014	33 – 11
97702–50016	18 – 2
	18 – 4
	18 – 6
	18 – 9
	27 – 8
	30 – 6
	34 – 9
97702–50020	18 – 12
97702–50030	6 – 20
9770L–40620	36 – 9
98502–05016	39 – 5
98502–05025	27 – 18
98902–06020	30 – 8
	30 – 18
98980–06016	7 – 7
99009–15400	13 – 8
	13 – 21

CODIGO Nº PART NO.	REF. Nº
99009–17400	15 – 20
99009–19400	10 – 6
9X568–C4105	26 – 35

CODIGO Nº PART NO.	REF. Nº

CODIGO Nº PART NO.	REF. Nº

CODIGO Nº PART NO.	REF. Nº